SHARP SERVICE MANUAL

CODE: 00ZAR15OPTA1E

AR-SP3

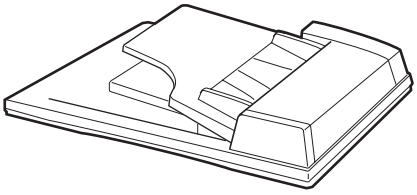

AR-FX3

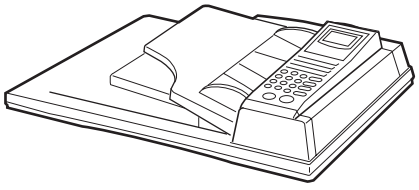

AR-DE9

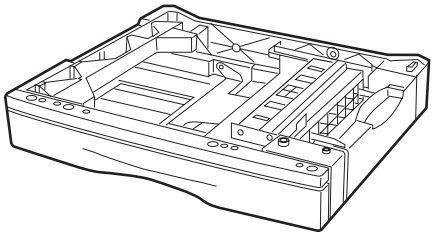

AR-PG1

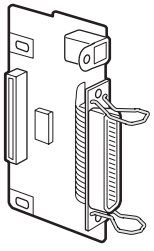

DIGITAL COPIER OPTIONS

AR-SP3 (SPF)
AR-FX3 (FAX)
AR-DE9 (1 TRAY UNIT)
MODEL AR-PG1 (GDI + USB Kit)

* For the specifications, operational descriptions, circuit diagrams, and Parts Guide of the AR-FX3, refer to the AR-F151 Service Manual and Parts Guide.

CONTENTS

[1] GENERAL . . . . . 1 - 1
[2] UNPACKING AND INSTALLATION . . . . . 2 - 1
[3] AR-SP3 . . . . . 3 - 1
[4] AR-DE9 . . . . . 4 - 1
[5] AR-PG1 . . . . . 5 - 1
● PARTS GUIDE

Parts marked with "⚠" are important for maintaining the safety of the set. Be sure to replace these parts with specified ones for maintaining the safety and performance of the set.

SHARP CORPORATION

This document has been published to be used for after sales service only.
The contents are subject to change without notice.

[1] GENERAL

1. List of available options

Option \ Model	AR-150	AR-155	AR-F151
AR-SP3 (SPF)	○ *1	×	×
AR-FX3 (FAX)	○ *1	×	×
AR-DE9 (1 TRAY UNIT)	○	○	× *1
AR-PG1 (GDI + USB Kit)	○	○	○

○ : Option available
× : Option not available
*1: The option setup is provided in the models for Europe. FAX and SPF are incompatible.

2. Outline and specifications of each option

A. AR-SP3 (Single Pass Feeder)

The single pass feeder (SPF) holds up to 30 originals for automatic feeding.

Part names

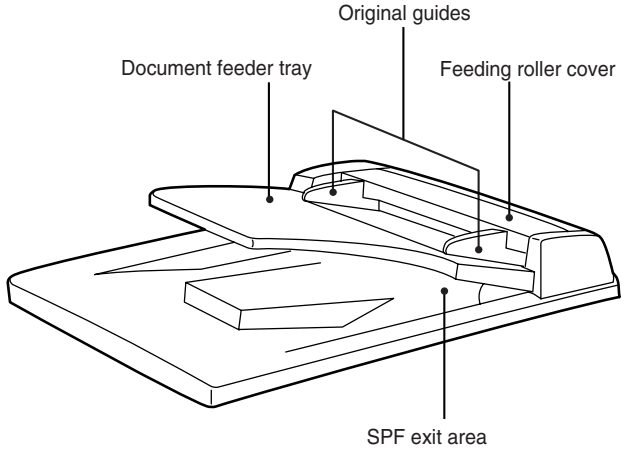

Specifications

Acceptable originals	Weight: 14 to 23 lbs.
	Size: 5-1/2″ × 8-1/2″ to 8-1/2″ × 14″
	Capacity: Up to 30 sheets
Power supply	Drawn from the copier
Weight	Approx.6.6 lbs.(3kg)
Dimensions	19.6″ (W) × 15″ (D) × 4.3″ (H) (498 mm (W) × 380 mm (D) × 110 mm (H))

B AR-DE9 (250 - Sheet Paper Feed Unit)

The paper feed unit provides the convenience of increased paper capacity for the copier and a greater choice of paper sizes readily available for copying.

Part names

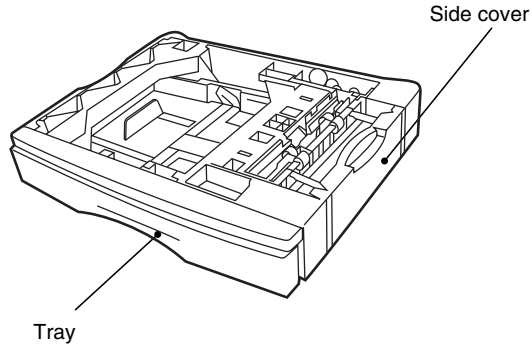

Specifications

Copy paper size	5-1/2″ × 8-1/2″ to 8-1/2″ × 14″
Paper weight	15 lbs. to 21 lbs.
Paper capacity	One paper tray with capacity for 250 sheets of 21 lb. bond paper
Weight	Approx. 6.6 lbs. (3 kg)
Dimensions	19.6″ (W) × 15.6″ (D) × 3.5″ (H) (498 mm (W) × 395 mm (D) × 88 mm (H))
Power supply	Drawn from the copier

C. AR-PG1 (GDI + USB Expansion Kit)

(1) MAIN FEATURES

a. Printing from Windows 3.1x, Windows 95, Windows 98*, and Windows NT 4.0 applications

* USB is supported on Windows 98 pre-installed only.

- High-speed and high-quality printing can be performed from Windows 3.1x, Windows 95, Windows 98, and Windows NT 4.0 applications through the SHARP GDI (Graphics Device Interface) system.
- Since print data is processed in the computer, waiting time during printing is short.

b. High-speed printing at 8 pages/min.

- First print time is approximately 9.6 seconds. (Excluding the communication time with PC)
- Print speed is 8 pages/min., when printing multiple pages.

(2) SPECIFICATIONS

Resolution	600 or 300 can be selected.
Page description language	SHARP GDI (Parallel) SHARP GDI, USB (USB)
Page orientation	Portrait or landscape
First print time	Approx. 9.6 seconds*
Print speed (multiple pages)	Approx. 8 pages per minute (letter or A4) (Parallel) Approx. 6 pages per minute (letter or A4) (USB)
Interface port	Bi-directional parallel interface (IEEE 1284 compliant) 2 m (6 feet) Max. USB (B-type) interface (twisted pair cable) 2 m (6 feet) Max.

* First print time may differ depending on operating conditions, such as power-supply voltage and room temperature.
Also the time may differ depending on data quantity to be printed and applications.

D. AR-FX3 (Facsimile Expansion Kit)

Refer to the AR-F151 Service Manual.

[2] UNPACKING AND INSTALLATION

1. AR-SP3 Instalation Manual

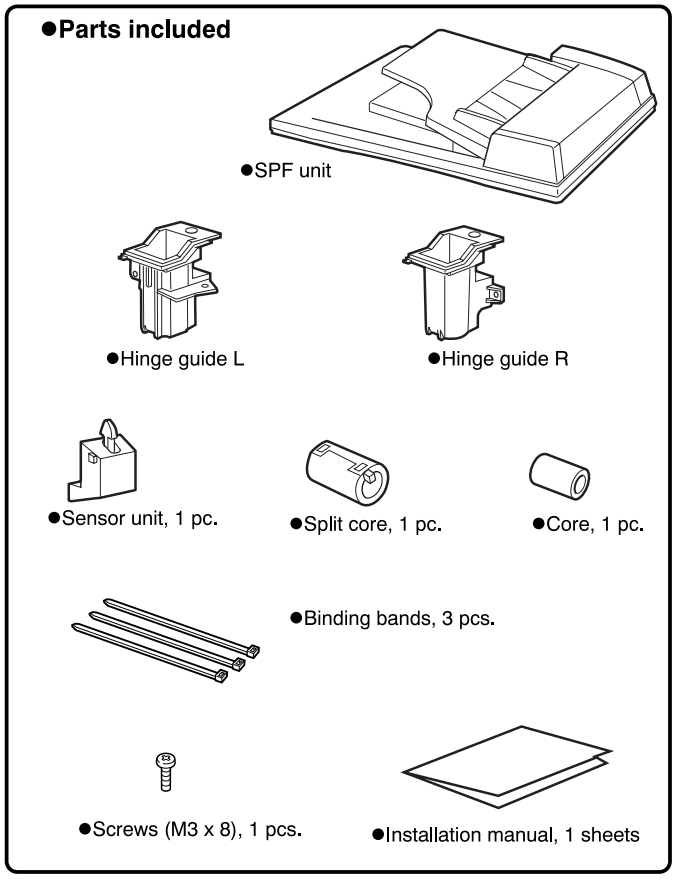

Turn the main switch to the “OFF” position and remove the power plug from the outlet.

1) Remove the document cover.
   - Remove the document cover from the copier.

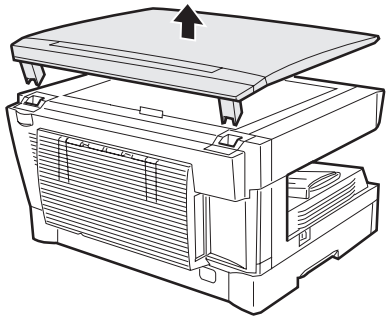

2) Remove the rear cabinet.
   - Remove the four screws and then remove the rear cabinet.

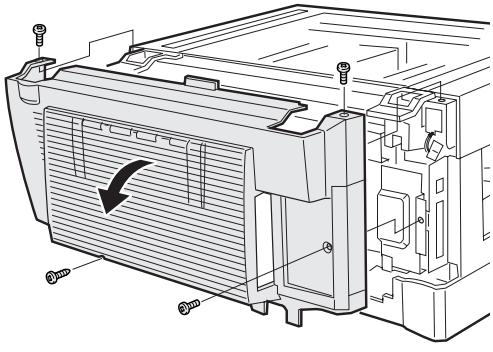

3) Remove the Mylar sheet from the rear cabinet.
   - Remove the Mylar sheet that covers the hole for the actuator of sensor unit.

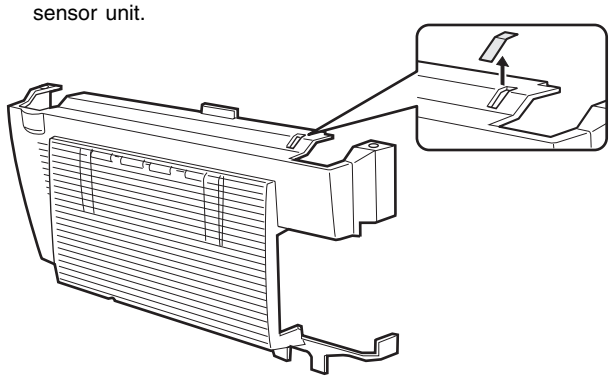

4) Remove the hinge guides L and R.
   - Remove the screws (two for each) and then remove the hinge guides L and R.

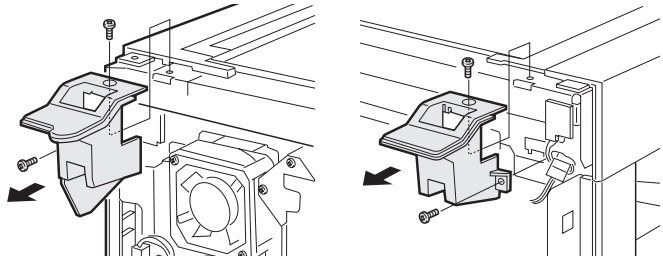

5) Attach the hinge guides L and R.
   - Attach the hinge guides L and R by fitting the pawls (two for each) into the frame of the copier and secure them with the two screws (M3 × 8) for each that have been removed in step 3.

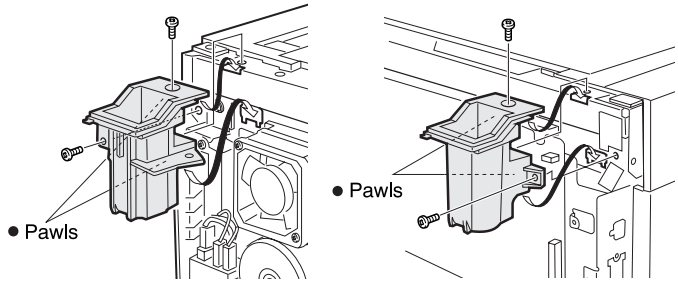

6) Place the SPF on the copier.

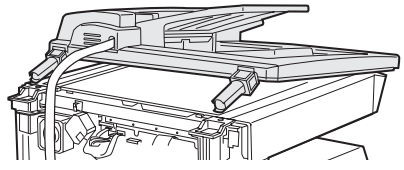

7) Connect the SPF with the copier using the relay harness.
   <1> Fit the snap band to the position shown in the illustration.
   <2> Attach the core to the relay harness. At this time, take care on the core position and twist the harness two or three times.
   <3> Secure the relay harness with the harness clamp.
   <4> Connect the connector.
   (Connect the connectors by aligning the black lines.)

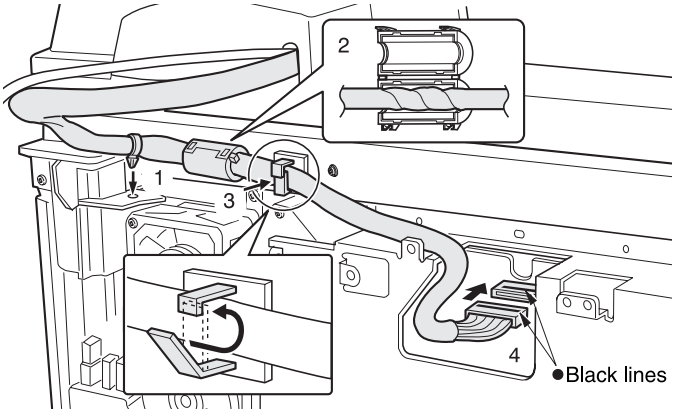

8) Attach the core to the ground wire and secure it.
   <1> Attach the core with two binding bands as shown in the illustration by taking care that the core is in the specified position.
   <2> Secure the ground wire to the hinge guides with the binding bands.
   <3> Secure the ground terminal to the frame of the copier with a screw (M3 × 10) and handle the wiring so that the core is under the hinge guides.

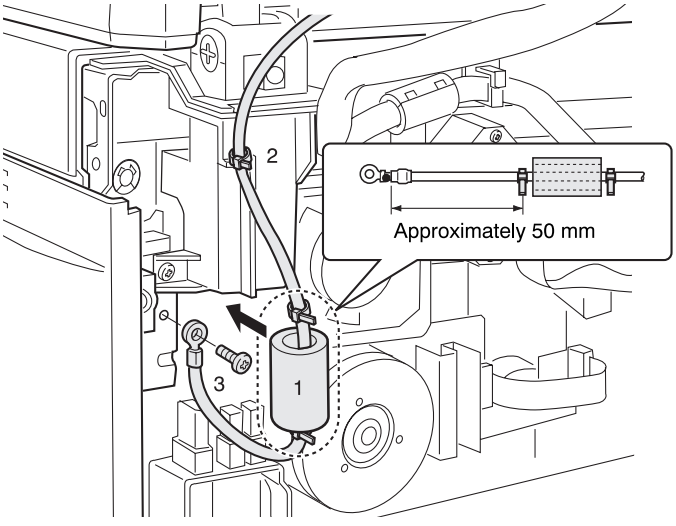

9) Remove the securing tape of the relay harness and connect the harness to the sensor unit.
   ● Remove the tape that secures the harness.
   Then connect the connector of the relay harness to the supplied sensorunit.

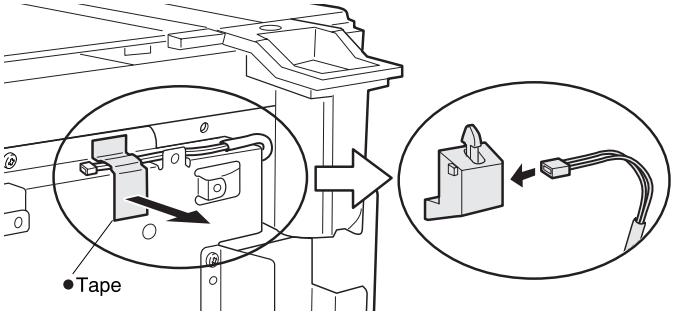

10) Attach the sensor unit.
   ● While pushing up the sensor unit fully, secure it to the PWB holder with a screw (M3 × 8).

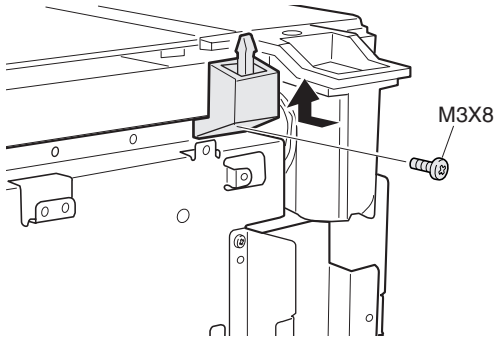

11) Attach the rear cabinet.
   ● Remove the rib from the rear cabinet.
   <1> Hang the four pawls shown in the illustration below on the plate.
   <2> Push down the actuator of the sensor unit.
   <3> Position the cabinet to the upper screw positions.
   <4> Ensure that the actuator is inserted into the square hole of the cabinet.
   Note: While pushing down the actuator of the sensor unit, attach the rear cabinet so that the actuator is inserted into the hole of the rear cabinet.

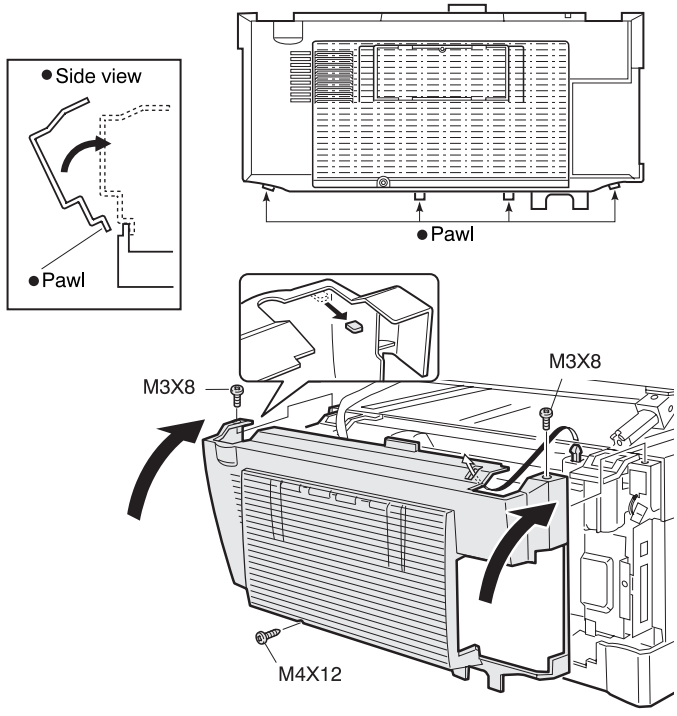

12) Attach the cover to the rear cabinet.
   <1> Align the arrow marks as shown in the illustration.
   <2> Then slide the cover to the left.
   <3> Secure the cover with a screw.

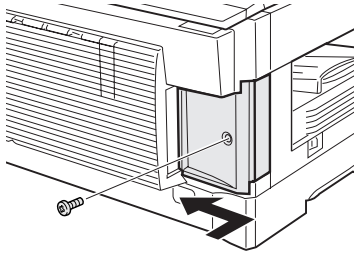

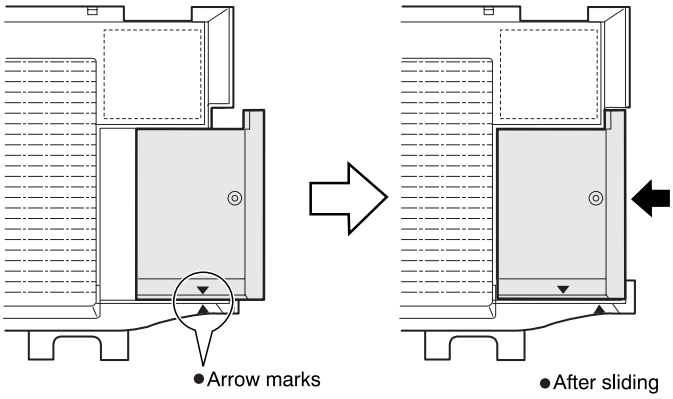

13) Attach the SPF to the copier.
   - Attach the SPF by inserting the hinge guide sections of the SP3 into the hinge guides L and R.

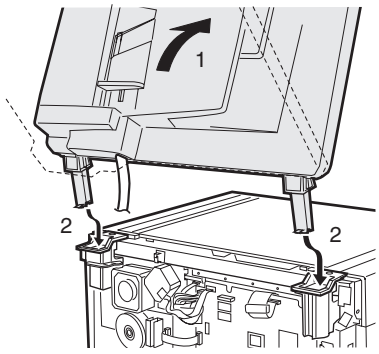

14) Insert the power plug into the outlet and turn the main switch of the copier to the "ON" position.

15) Perform SIM setting.
   - Execute simulation [2] of [26] and enter [1].

16) Check the ON/OFF operation of the open detection sensor and book detection sensor.
   - Execute simulation [2] of [2] and check that the indicator on the operation panel lights up and goes out by opening and closing the SPF. When the book detection sensor is turned ON/OFF, the drum replacement lamp is turned ON/OFF accordingly.

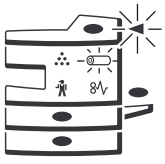

17) Check the copy ratio, and then check the center displacement and leading edge image void.
   - Place an original on the document glass and make a copy. Then, place an original in the document feeder tray and make a copy.
     If the center of the copy from the document glass is displaced from the copyfrom the document feeder, adjust the center referring to the service manual.

2. AR-FX3 Installation Manual

●Parts included

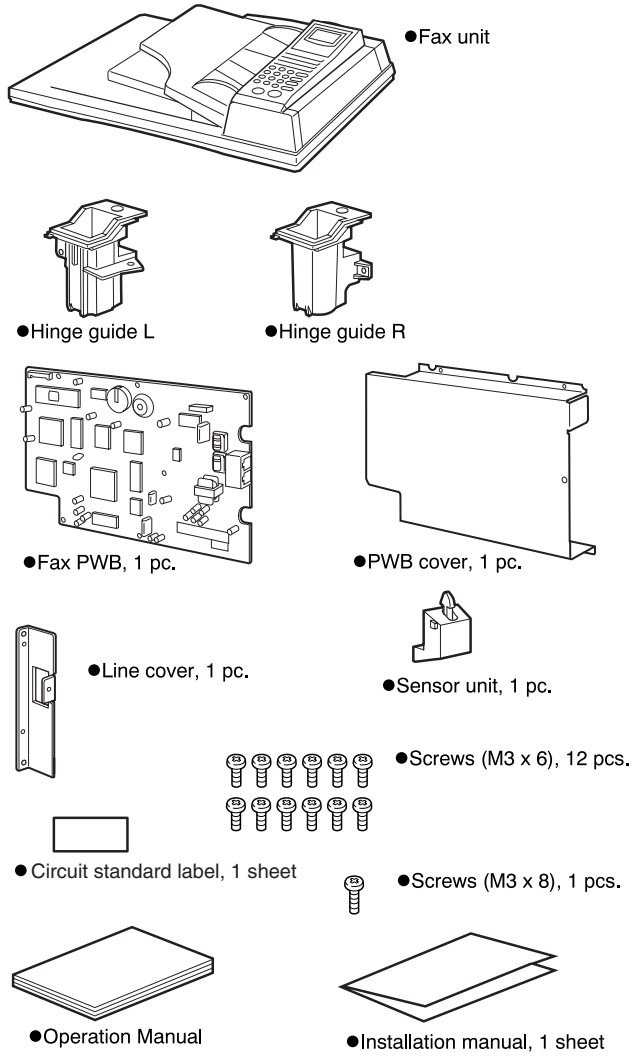

Turn the main switch to the "OFF" position and remove the power plug from the outlet.

1) Remove the document cover and the rear cabinet.
   - After removing the document cover, remove the four screws and then remove the rear cabinet.

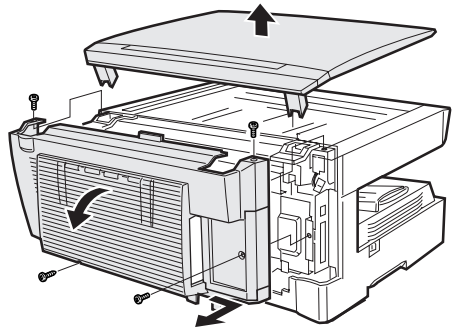

2) Remove the Mylar sheet from the rear cabinet.
   - Remove the Mylar sheet that covers the hole for the actuator of sensor unit.

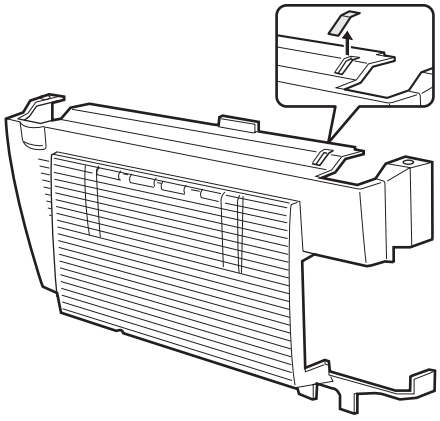

3) Remove the hinge guides L and R.
   - Remove the screws (two for each) and then remove the hinge guides L and R.

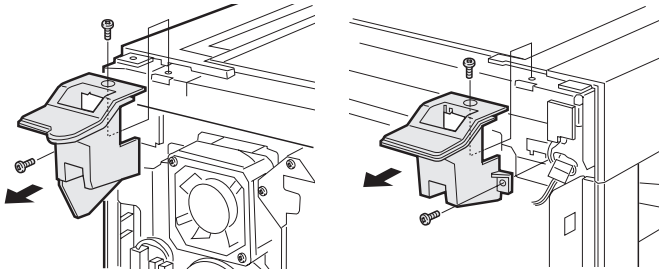

4) Attach the hinge guides L and R.
   - Attach the hinge guides L and R by fitting the pawls (two for each) into the frame of the copier and secure them with the two screws (M3 × 8) for each that have been removed in step 2.

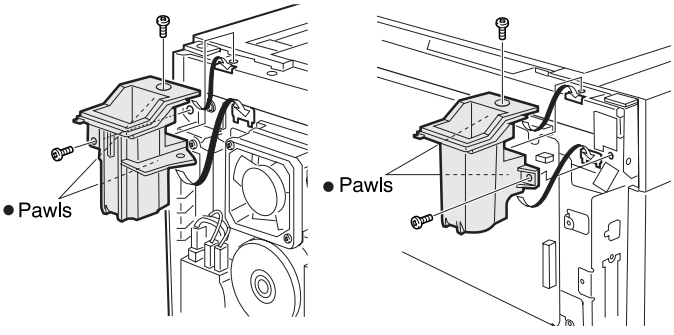

5) Remove the securing tape of the relay harness and connect the harness to the sensor unit.
   - Remove the tape that secures the harness.
     Then connect the connector of the relay harness to the supplied sensor unit.

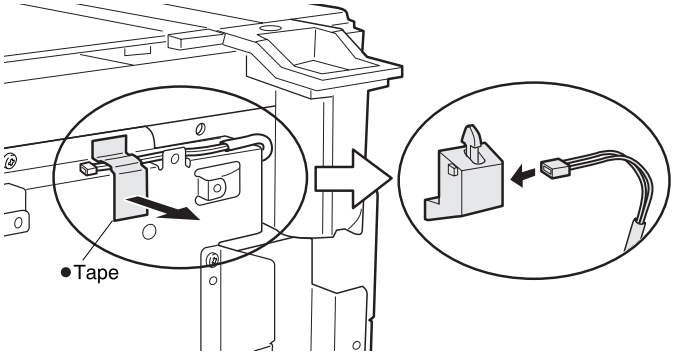

6) Attach the sensor unit.
   - While pushing up the sensor unit fully, secure it to the PWB holder with a screw (M3 × 8).

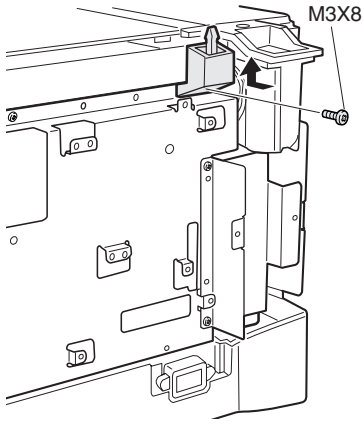

7) Replace the line cover.
   - Remove the two screws, replace the line cover that has been attached at shipping with the supplied line cover, and secure it with the two screws.

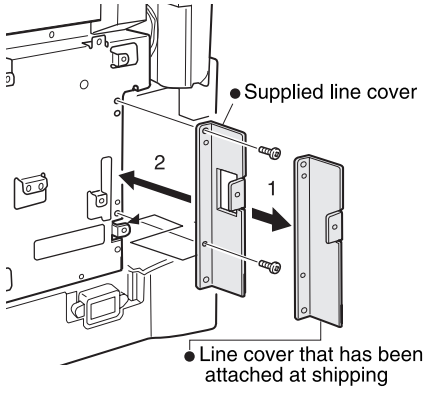

8) Place the SPF on the copier.

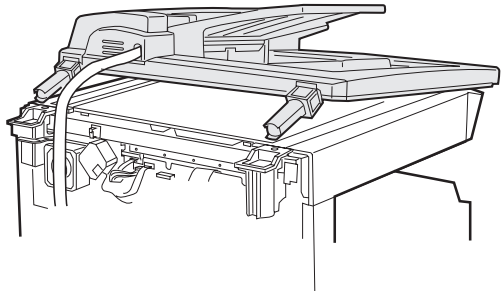

9) Connect the SPF to the copier with the SPF relay harness.
   <1> Fit the snap band to the position shown in the illustration.
   <2> Remove the screw that secures the PWB holder and tighten the ground wire together with the PWB holder.
   <3> Secure the relay harness with the harness clamp.
   <4> Connect the connector.(Connect the connectors by aligning the black lines.)

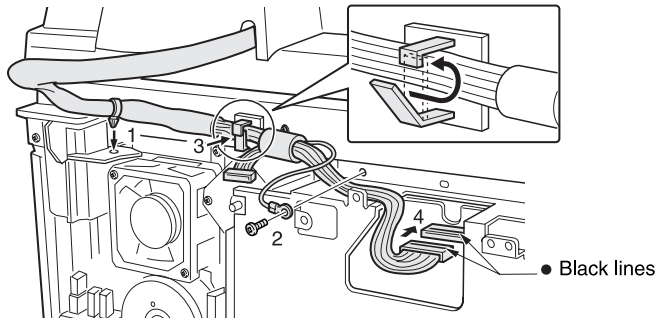

10) Attach the fax PWB.
- While ensuring that the connector of the fax PWB is securely connected to that of the copier, attach the fax PWB to the PWB cover with seven screws (M3 × 6) and connect the relay harness connector.

Connect the relay harness to the connector of the fax PWB.
(Connect the connectors by aligning the black lines.)

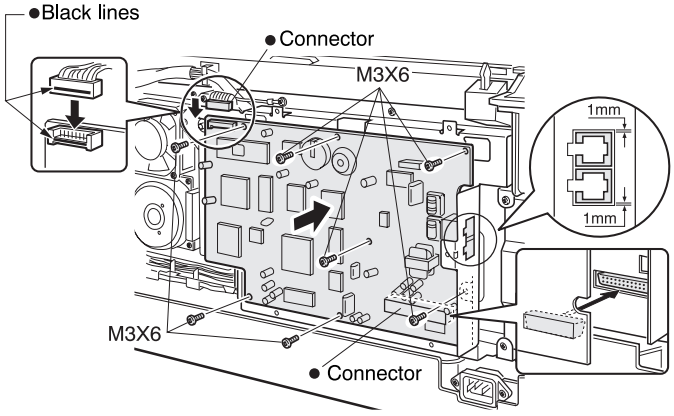

11) Attach the PWB cover.
- Attach the supplied PWB cover with five screws (M3 × 6).

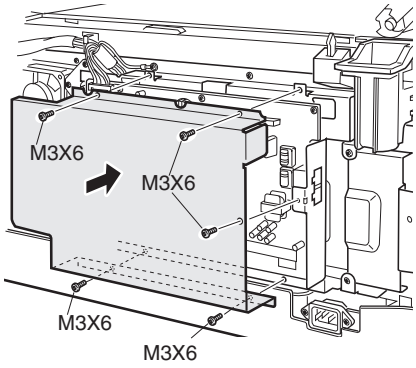

12) Attach the rear cabinet.
<1> Hang the four pawls shown in the illustration below on the plate.
<2> Push down the actuator of the sensor unit.
<3> Position the cabinet to the upper screw positions.
<4> Ensure that the actuator is inserted into the square hole of the cabinet.
Note: While pushing down the actuator of the sensor unit, attach the rear cabinet so that the actuator is inserted into the hole of the rear cabinet.

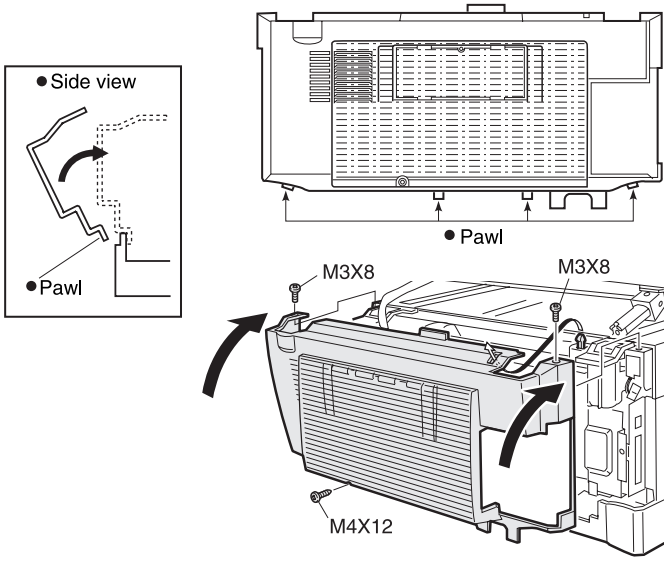

13) Attach the cover to the rear cabinet.
<1> Align the arrow marks as shown in the illustration.
<2> Then slide the cover to the left.
<3> Secure the cover with a screw.

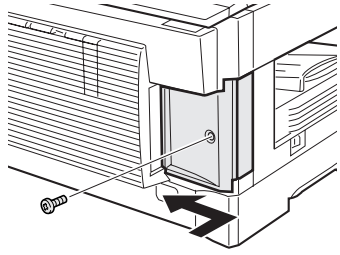

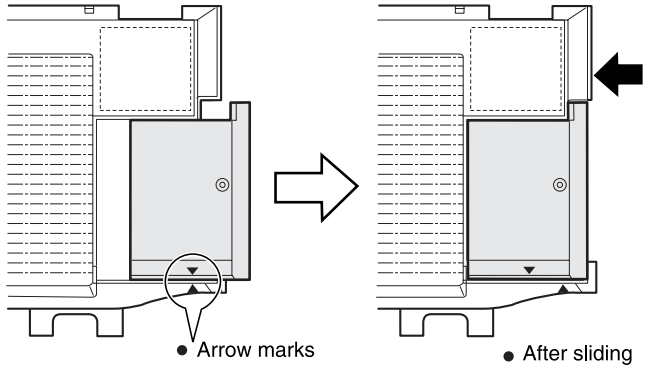

14) Attach the SPF to the copier.
- Attach the SPF by inserting the hinge guide sections of the FX3 into the hinge guides L and R.

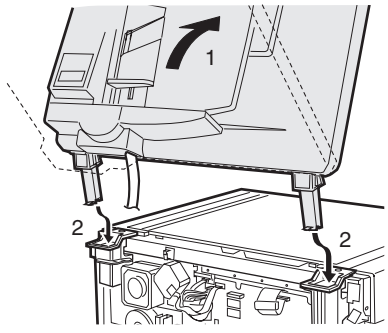

15) Stick the label to the rear cabinet.
- After installing the FAX expansion kit in the machine, please put the registration label, packed with the kit, on the prescribed location.

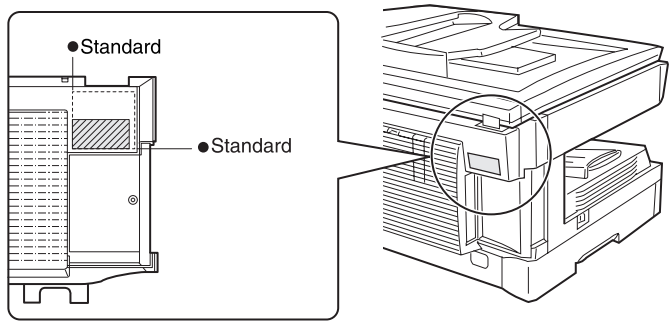

∗ For the details,refer to the AR-FX3 Installation Manual.

16) Insert the power plug into the outlet and turn the main switch of the copier to the “ON” position.

17) Perform SIM setting.
Execute simulation [2] of [26] and enter [1].

18) Check the ON/OFF operation of the open detection sensor and book detection sensor.
- Execute simulation [2] of [2] and check that the indicator on the operation panel lights up and goes out by opening and closing the FAX-SPF. When the book detection sensor is turned ON/OFF, the drum replacement lamp is turned ON/OFF accordingly.

19) Check the copy ratio, and then check the center displacement and leading edge image void.
- Place an original on the document glass and make a copy. Then, place an original in the document feeder tray and make a copy. If the center of the copy from the document glass is displaced from the copy from the document feeder, adjust the center referring to the service manual.

3. AR-DE9 Installation Manual

●Parts included

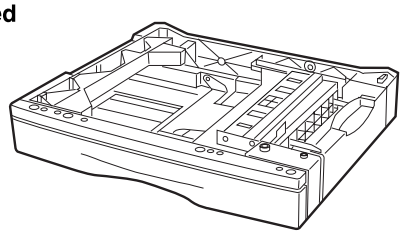

●Screws (M4 x 16), 4 pcs.

Turn the main switch to the “OFF” position and remove the power plug from the outlet.

1) Remove the DV cartridge from the copier.
- Open the bypass tray, side cover, and front cover, and then remove the DV cartridge.

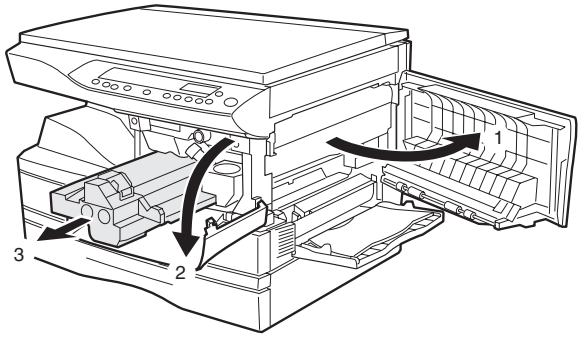

2) Make the copier upright.
- Close the front cover, side cover, and bypass tray, and then make the copier upright in the orientation shown in the illustration.

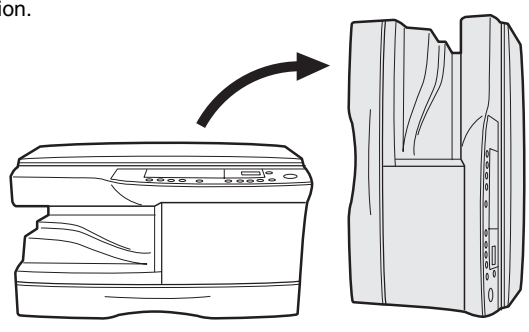

3) Remove the OP gear cover and rubber feet from the bottom of the copier.
- Remove the screw and remove the OP gear cover.
Then, take off and remove the rubber feet.

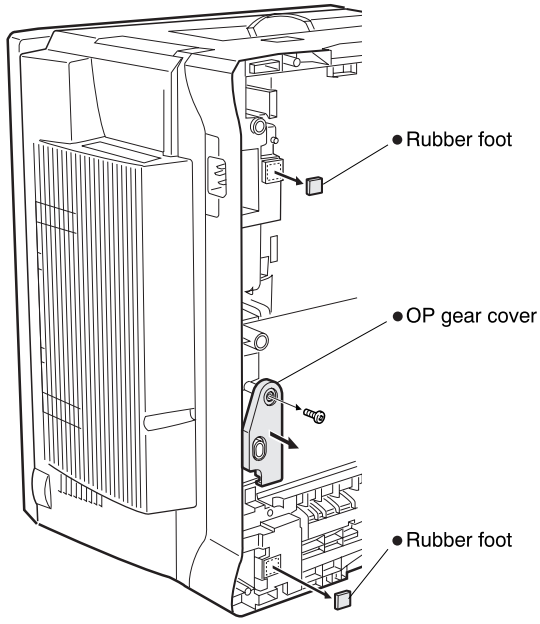

4) Install the second cassette unit to the copier.
- If the second cassette unit is aligned to the copier, it can be positioned automatically.
Hold the copier lightly to prevent it from toppling down and secure the second cassette unit with four screws (M4 × 16).

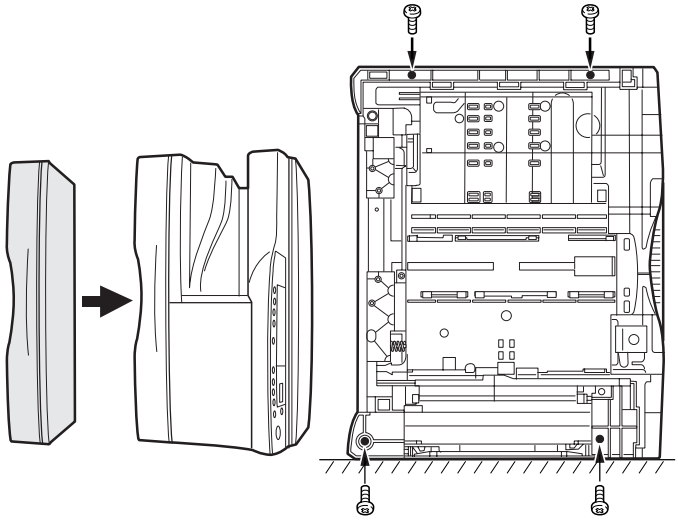

5) Remove the rear cover and connect the connector.
- Remove the screw and remove the rear cover.
Then, connect the connector of the second cassette unit to that of the copier.

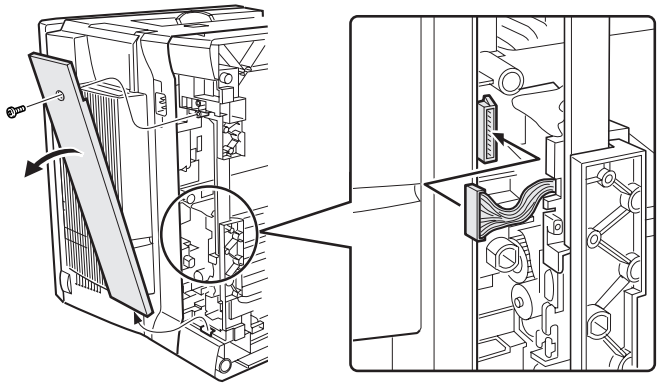

6) Attach the rear cover.
   - Attach the rear cover to its original position and secure it with the screw (M4 × 12).

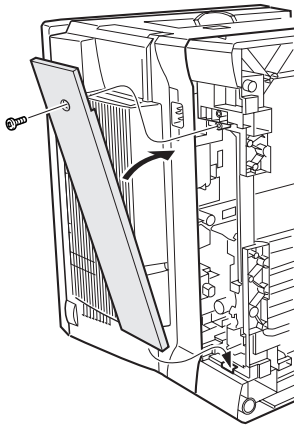

7) Return the copier to the normal orientation.
   - When returning the copier to the normal orientation, gently return it without giving a shock.

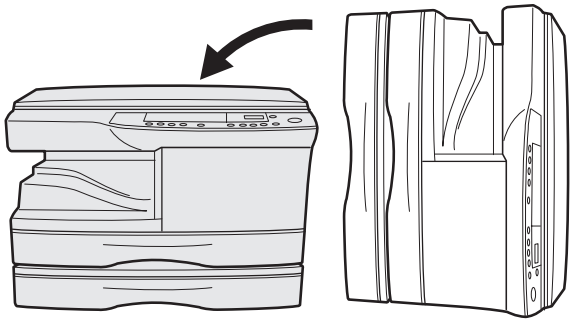

8) Insert the DV cartridge into the copier.
   - Open the bypass tray, side cover, and front cover, and insert the DV cartridge. Then, close the front cover, side cover, and bypass tray.

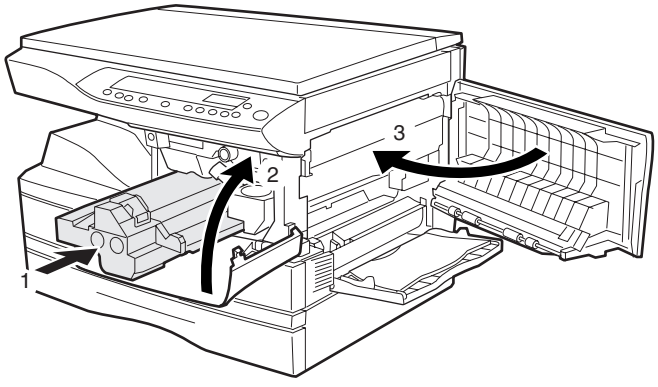

9) Remove the paper tray lock for packing.
   - Remove the paper tray lock for packing that secures the turning plate in the paper tray by rotating it in the direction of the arrow and store it in the specified position.

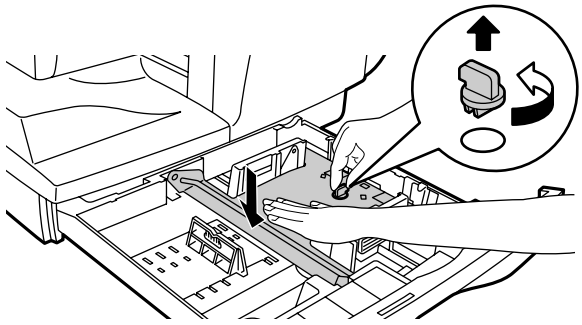

10) Set the paper tray side guide.
   - Squeeze the lever of the paper tray side guide to slide the guide to the position for the paper size to be used.

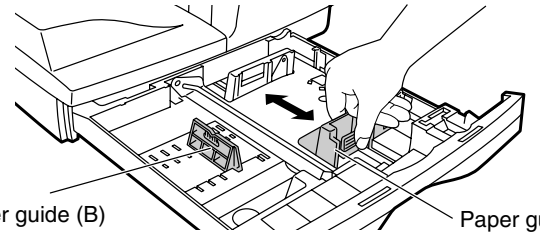

11) Load paper into the paper tray.
   - When loading paper, do not exceed the maximum height line.

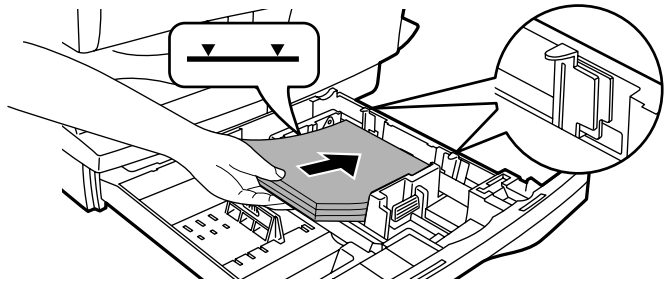

12) Remove the optical locking screw and fusing unit packing lever so that the copier is ready.

13) Insert the power plug into the outlet and turn the main switch to the “ON” position. Then, perform the following procedure.

14) Perform SIM setting.
   - Execute simulation [3] of [26] and enter [1].

15) Check the center displacement.
   - Place an original on the document glass and make a copy using the tray in the copier.
     Then, make a copy using the tray in the installed optional paper feed unit.
     If the center of the copy from the optional paper feed unit is displaced from the copy from the tray in the copier, adjust the center referring to the service manual.

4. AR-PG1

A. Installation Manual

● Parts included

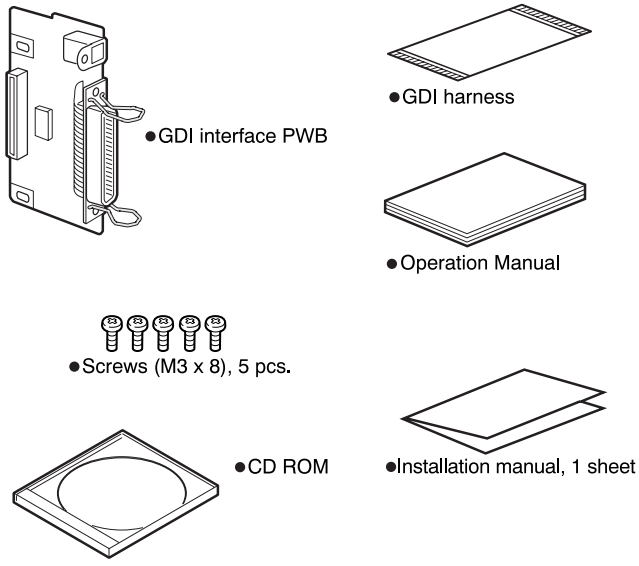

Turn the main switch to the “OFF” position and remove the power plug from the outlet.

1) Remove the cover of the rear cabinet.
   - Remove the screw, slide the cover in the direction indicated by the arrow, and remove the cover of the rear cabinet.

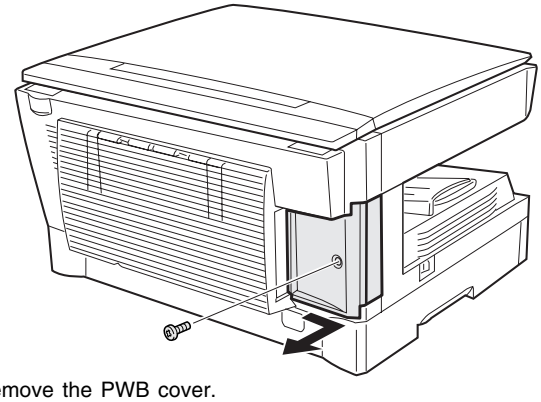

2) Remove the PWB cover.
   <1> Loosen the screws that secure the PWB cover.
   <2> Push up the PWB cover and
   <3> Rotate it counterclockwise to remove it.

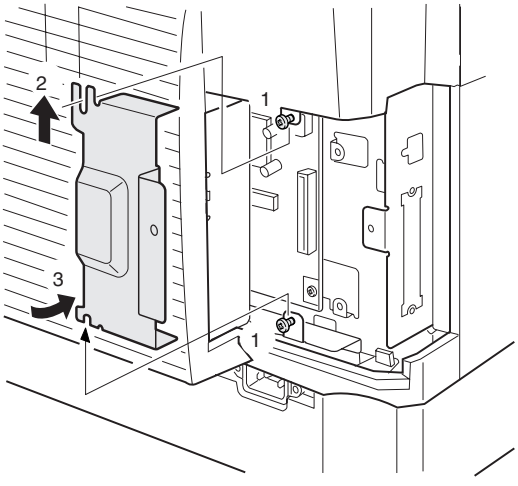

3) Attach the GDI interface PWB.
   - Fit the connector of the GDI PWB into the mounting position of the copier, secure the side A with three screws, and then secure the front B with two screws.

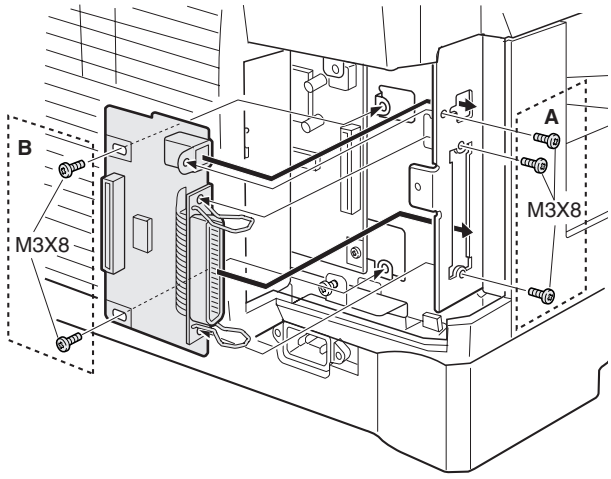

4) Attach the GDI harness.
   - Attach the GDI harness so that the blue lines face forward and also face toward the GDI interface side.

   Note: Be careful about the direction of the blue lines.

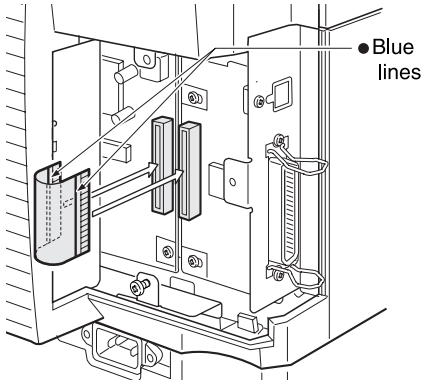

5) Attach the PWB cover.
   <1> Before attaching the PWB cover, hold down the GDI harness in the direction A in the illustration below.
   <2> Fit the upper part of the PWB cover to the upper screw that has been loosened in step 2 above.
   <3> While rotating the lower part of the PWB cover clockwise, fit it to the lower screw.
   <4> Tighten the upper and lower screws to secure the cover.

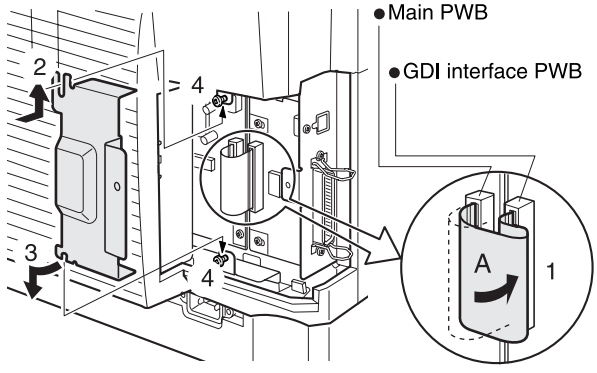

6) Attach the rear cover.
   - Align the arrow marks as shown in the illustration and then slide the cover to the left. Then, secure the cover with a screw.

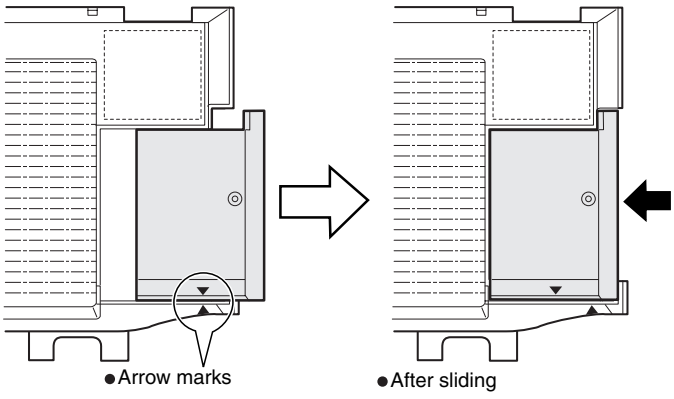

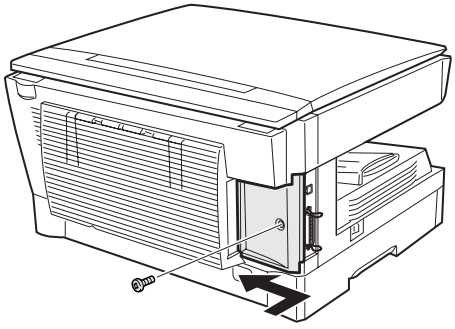

B. Installing the printer driver software

(1) Description of the printer driver

The printer driver is the software program which runs the printer. It converts the data in your file into information that the printer can understand. It also controls communication between the printer and computer as the data is printed.

(2) Checking the hardware and software requirements

You will need the following hardware and software in order to install the printer driver.

Computer type	IBM PC/AT or compatible computer equipped with a bi-directional parallel or USB interface, and CD-ROM drive
Windows type	Windows 3.1x, Windows 95, Windows 98*, Windows NT 4.0 ∗ USB is supported on Windows 98 preinstalled only.
CPU	486DX 66 MHz or better
Physical RAM	Windows 95, Windows 3.1x: 8MB (16MB or more is recommended.) Windows NT4.0: 12MB (16MB or more is recommended.) Windows 98: 16MB (32MB or more is recommended.)
Display	640 × 480 dots (VGA) or better
Hard disk free space	10 MB or more

Caution: The printer driver included in this product cannot be used under Windows NT3.5x, OS/2, pure MS-DOS and other operating systems which are not described above.

(3) Installing the printer driver

The software for your printer is provided on CD-ROM.
Before installing the printer driver, be sure to check the following items.

- Is the printer connected properly to the computer?
- Does the printer have paper?
- Is there another GDI printer driver or Windows Printing System printer driver already installed? If installed, change the printer port setting. To change the printer port settings.

In this description, the following drive configuration is presumed. Specify proper drives depending on the configuration of your computer.

Drive R: CD-ROM drive (installation source). If necessary, replace R with the letter of your CD-ROM drive.
Drive C: Hard disk drive (installation destination). If necessary, replace C with the letter of your hard disk drive.

a. Windows 95/Windows NT 4.0 Installation Instructions:

With both the computer and the printer turned off, connect the printer to the computer with a parallel interface cable.

1) Load paper into the paper tray of the printer. For instructions on loading paper, see the section LOADING COPY PAPER in the copier operation manual.
2) Turn on the printer.
3) Turn on your computer and start Windows.
4) When using Windows 95 on a personal computer with plug & play*, the “Update Device Driver Wizard” window will appear. Insert the installation CD-ROM into the CD-ROM drive. Click the Next button and follow the on-screen instructions. Proceed to step 7. If the “Copying Files” window appears during this operation, enter R:\ (if the CD-ROM is designated as drive R) and click the OK button.

- If you use Windows 95 and the “New Hardware Found” window will appear, click the Driver from Disk Provided by Hardware Manufacturer button and then click OK. Proceed to step 6.
- If you use Windows 95 and the screen shown above or the “New Hardware Found” window does not appear, proceed to step 5.
- If you use Windows NT 4.0, proceed to step 5.

∗ Plug & play
This feature is effective if both the computer and peripheral equipment are equipped with IEEE 1284 compliant parallel interface.

5) Insert the installation CD-ROM into the CD-ROM drive.
   Click the Start button and select Run. When the screen shown below appears, type R:\SETUP (if the CD-ROM is designated as drive R) and click the OK button. Proceed to step 7.

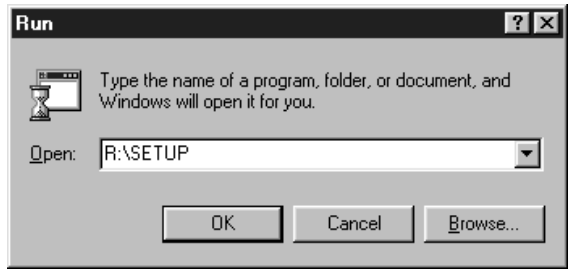

6) "Install from Disk" window will appear. Insert the installation CD-ROM into the CD-ROM drive. Type R:\ (if the CD-ROM is designated as drive R) and click the OK button. Proceed to step 7.

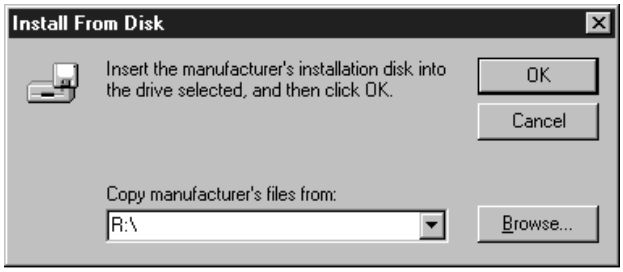

7) The installation program will start. To install the printer driver to the default folder, click the Next button. To select a different folder, select Browse or type in the new path and folder name. Click OK and say YES to create the folder, select the Next button to continue.

8) On the display, you will see "printer port to be used". Normally, this is LPT1 and it is selected automatically.
Ensure that Yes is checked to use the printer as the default printer.
Finally click the Next button.

9) A "Confirm installation" window will be displayed. To continue installation, click the Yes button.

10) When the installation is complete, you will be asked whether or not to print a test page. If you wish to do so, click the Yes button. At this time, ensure that paper is loaded in the paper tray.

11) If the test print completes successfully, click the Finish button. "The installation of the SHARP AR-150 Series Software is complete." window will be displayed. Click the OK button.

b. Windows 98:

With both the computer and the printer turned off, connect the printer to the computer with either a parallel or a USB interface cable.

1) Load paper into the paper tray of the printer. For instructions on loading paper, see the section LOADING COPY PAPER found in the copier operation manual.

2) Turn on the printer.

3) Turn on your computer and start Windows.

When using the USB interface:

- Connect your personal computer and the printer using a USB interface cable if you have not already done so.
- When the "Add New Hardware Wizard" window appears, insert the installation CD-ROM, click the Next button, follow the on-screen instructions, and finally click the Finish button.

4) When using Windows 98 on a personal computer with plug & play*, the "Add New Hardware Wizard" window will appear. Click the Next button and follow the on-screen instructions.
- If the "Add New Hardware Wizard" window does not appear, proceed to step 8.

∗ Plug &play: For plug & play information

5) Select Search for the best driver for your device and click the Next button.

6) Insert the installation CD-ROM into the CD-ROM drive. (If you are using the USB interface, confirm that the installation CD-ROM is in the CD-ROM drive.) Select the CD-ROM drive and click the Next button.

7) Windows driver file search will find the device "SHARP AR-150 Series". Click the Next button. Proceed to step 9.

8) Insert the installation CD-ROM into the CD-ROM drive. (If you are using the USB interface, confirm that the installation CD-ROM is in the CD-ROM drive.) Click the Start button and select Run. When the window shown below appears, type R:\SETUP (if the CD-ROM is designated as drive R) and click the OK button. Proceed to step 9.

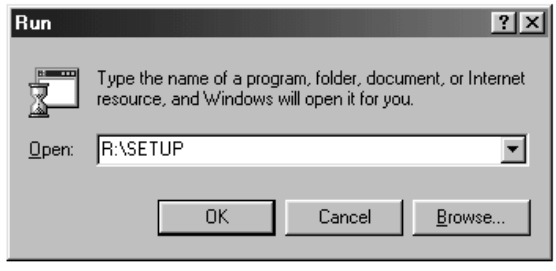

9) The installation program will start. To select a different folder, select Browse and type in the path and folder name where the printer driver will be installed. Click OK and say YES to create the folder, select the Next button to continue. To install the printer driver to the default folder, click the Next button.

10) On the display you will see “printer port to be used”. The printer port is selected automatically. If you are using the parallel interface, this is LPT1. If you are using the USB interface, this is LPT/USB1. Ensure that Yes is checked to use the printer as the default printer. Finally click the Next button.

11) A “Confirm installation” window will be displayed. To continue installation, click the Yes button.

12) When the installation is complete, you will be asked whether or not to print a test page. If you wish to do so, click the Yes button. At this time, ensure that paper is loaded in the paper tray.

13) If the test print completes successfully, click the Finish button. “The installation of the SHARP AR-150 Series Software is complete.” window will be displayed. Click the OK button.

c. Windows 3.1x:

With both the computer and the printer turned off, connect the printer to the computer with a parallel interface cable.

1) Load paper into the paper tray of the printer. For instructions on loading paper, see the section LOADING COPY PAPER in the copier operation manual.

2) Turn on the printer and then start Windows on your computer.

3) Insert the installation CD-ROM into a CD-ROM drive.

4) Choose File from the Menu bar in Program Manager, and then choose the Run... command.

5) Type R:\SETUP (if the CD-ROM is designated as drive R) in the command line box and then click the OK button.

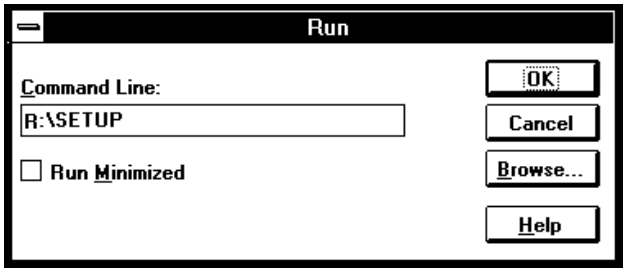

6) Select a directory to which the printer driver will be installed and click the Next button. To install it to the default directory, click the Next button.

7) A “printer port to be used” window will be displayed. Normally, LPT1 is automatically set.
Then ensure that Yes is checked to use this printer as the default printer.

8) A “Confirm installation” window will be displayed. To continue installation, click Yes.

9) When the installation is complete, restart Windows.

(4) AR-150 Series printer driver group

When the printer driver is installed, the SHARP AR-150 Series printer driver group will be created. This group of software programs provides the following functions:

a. Uninstall AR-150 Series

The printer driver can be uninstalled. If the driver is uninstalled, printing can no longer be performed on the printer.
For proper uninstallation, be sure to use the SHARP uninstall program of the printer driver group.

Readme
The latest information on the printer driver is included in this document. Read the Readme first.

Advanced Settings
See help for Advanced Settings.

Status Monitor
The Status Monitor window provides visual information about the printer state and current job.

DOS Emulation Setup

Status Monitor HELP
Assistance and information for Status Monitor.

DOS Emulation HELP
Assistance and information for DOS Emulation support.

Advanced Settings HELP
Assistance and information for Advanced Settings.

[3] AR-SP3

1. Operational descriptions

A. Outline

The SPF (Single Path Feeder) is installed to the AL-1000/1200 as a standard provision, and it automatically copies up to 30 sheets of documents of a same size. (Only one set of copies)

B. Document transport path and basic composition

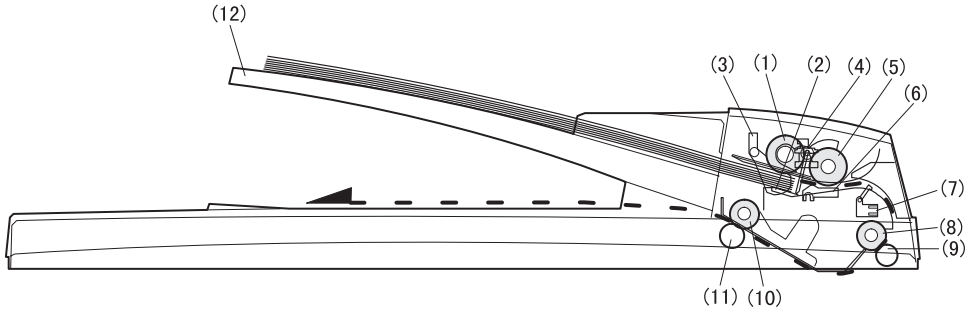

(1)	Pickup roller	(2)	Sheet of document for paper feed	(3)	Set detection ACT
(4)	Paper stopper	(5)	Document feed roller	(6)	Separation sheet
(7)	Paper entry sensor	(8)	PS roller D	(9)	Transport follower roller
(10)	Paper exit roller	(11)	Paper exit follower roller	(12)	Document tray

C. Operational descriptions

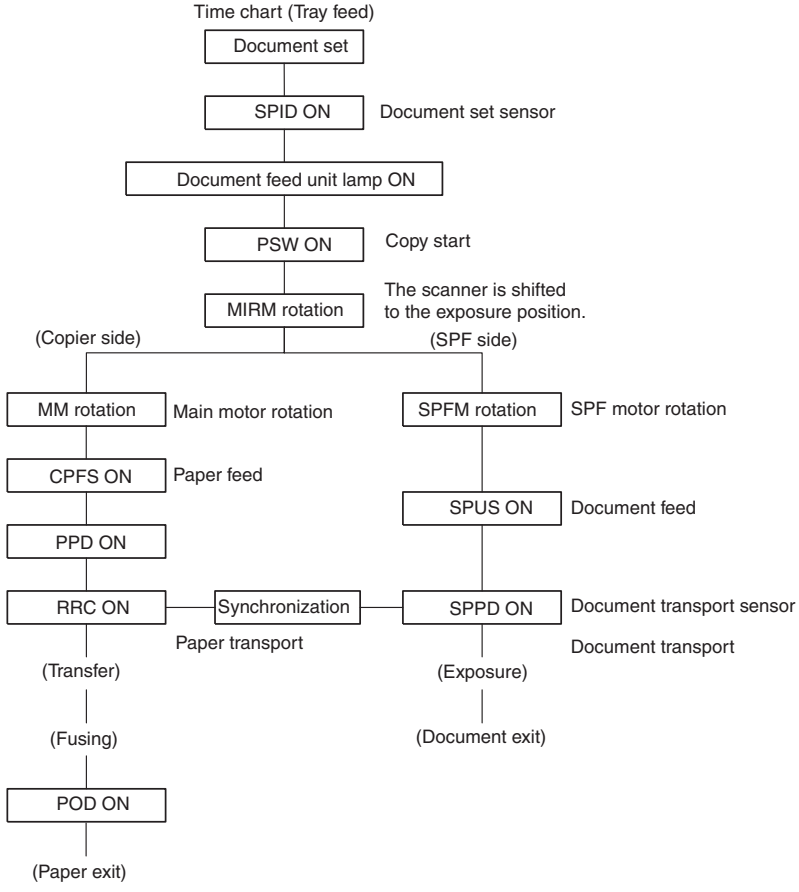

In the zooming mode, the magnification ratio in the sub scanning direction (paper transport direction) is adjusted by changing the document transport speed.

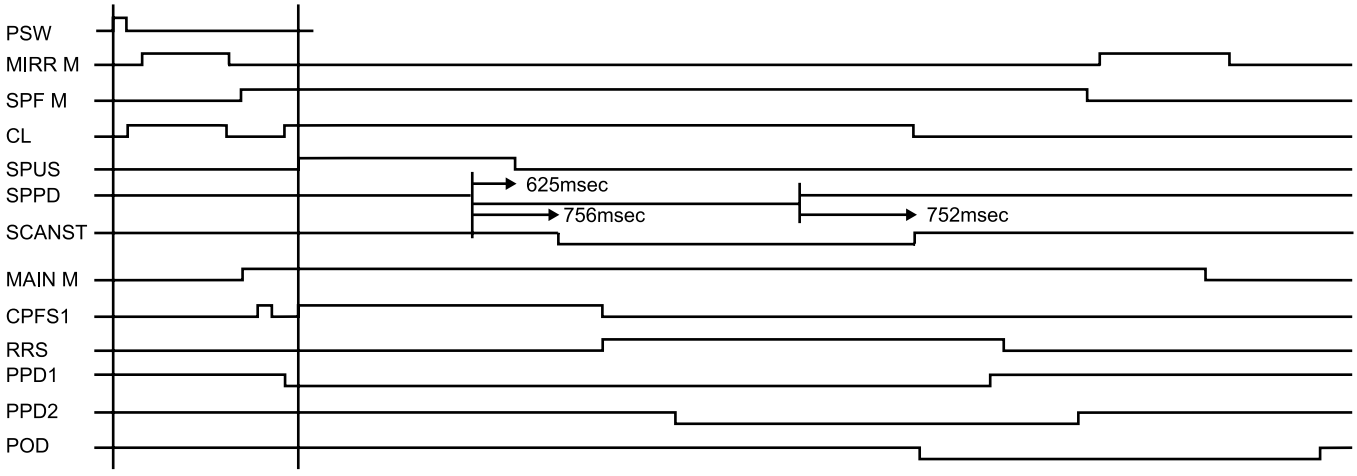

D. Cases where a document jam is caused

a. When SPPD is ON (document remaining) when the power is turned on.
b. When SPPD is not turned ON within about 1.5 sec (at 100% copy) after starting the document feed operation.
c. When SPPD is not turned on within about 4.7 sec (at 100% copy) after turning on SPPD.
d. When the SPF document jam release door or the OC cover is opened during document transport (SPF motor rotating).

2. Disassembly and assembly

No.	Part name Ref.
A	Sensor PWB
B	Pickup solenoid
C	Clutch
D	Manual paper feed roller, pickup roller
E	Belt
F	SPF motor
G	Paper entry sensor
H	PS roller
I	Paper exit roller

Pickup unit removal

1) Remove three fixing pawls from the bottom of the machine.
2) Remove the front cover and the rear cover.

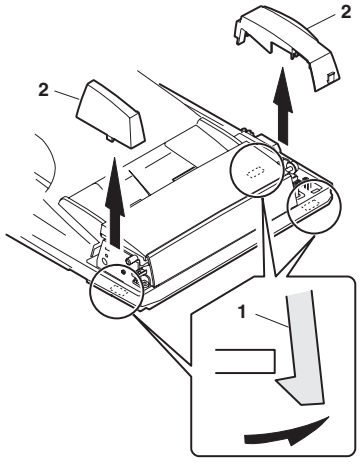

1) Remove the belt, the paper feed frame SP, and two harnesses.
2) Remove the pickup unit.

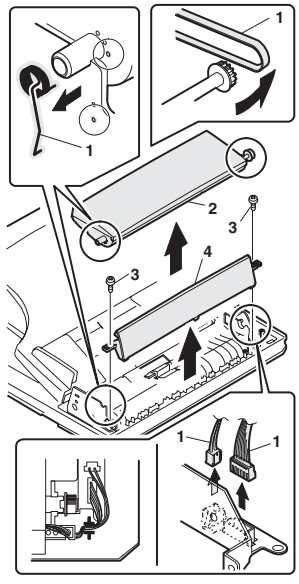

* When installing the parts, be careful of the hole position of the paper frame SP.

A. Sensor PWB

1) Remove two screws from the bottom of the pickup unit.
2) Remove the upper cover.

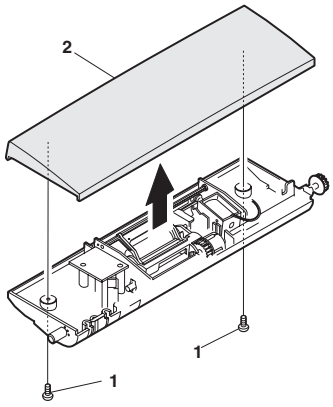

1) Remove two screws.
2) Remove the sensor PWB.
3) Remove the harness.

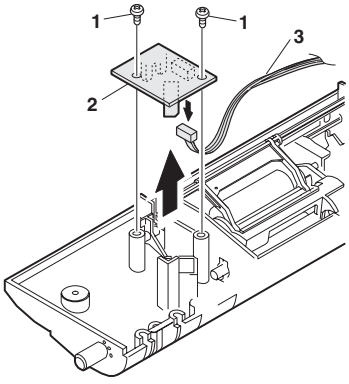

B. Pickup solenoid

1) Remove two screws.
2) Remove the pickup solenoid

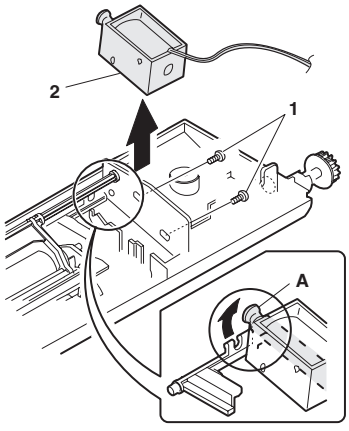

* When installing, hang iron core A on the solenoid arm.

C. Clutch

1) Remove the E-ring.
2) Remove the pulley and bush.
3) Slide the bush in the arrow direction.
4) Lift the clutch, and 5) remove the clutch.

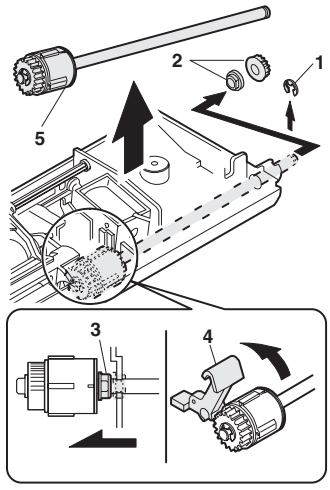

1) Remove the E-ring.
2) Remove the parts.

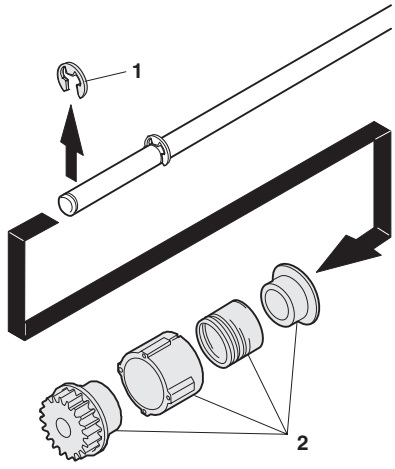

D. Manual paper feed roller, pickup roller

1) Lift the paper stopper.
2) Slide the takeup roller unit.
3) Slide the bush in the arrow direction.
4) Remove the takeup roller unit.

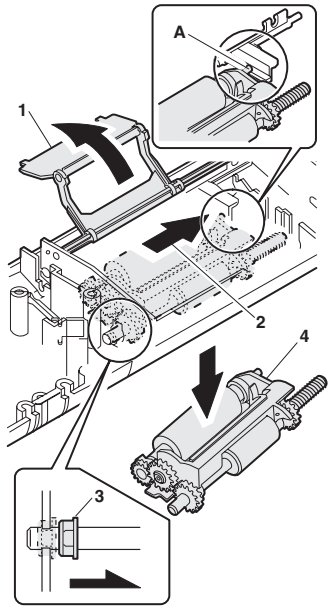

* When installing the takeup roller, hang the projection of the takeup roller unit on the solenoid arm.

1) Remove the parts.
2) Remove the manual paper feed roller.
3) Remove the pickup roller.
4) Remove the parts.

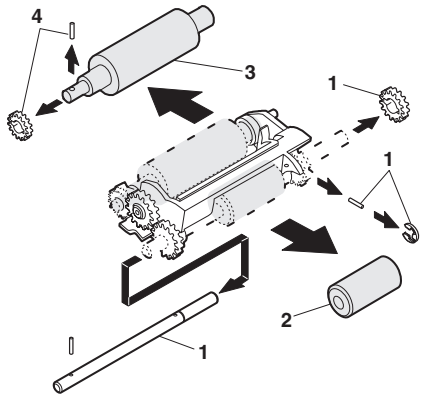

Transport unit removal

1) Remove two screws.
2) Remove the document tray unit.
3) Remove five screws.
4) Remove the transport unit.

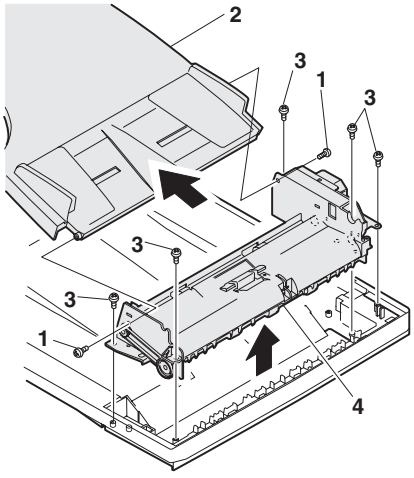

E. Belt

1) Remove the belt.

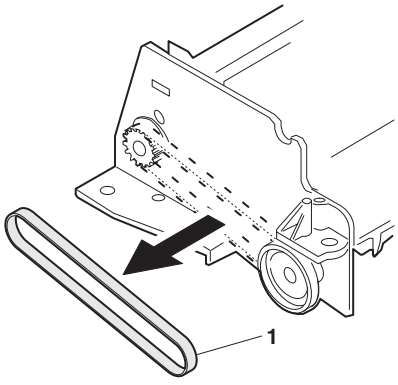

F. SPF motor

1) Remove the harness.
2) Remove four screws.
3) Remove the drive unit.
4) Remove the belt.
5) Remove two screws.
6) Remove the SPF motor.

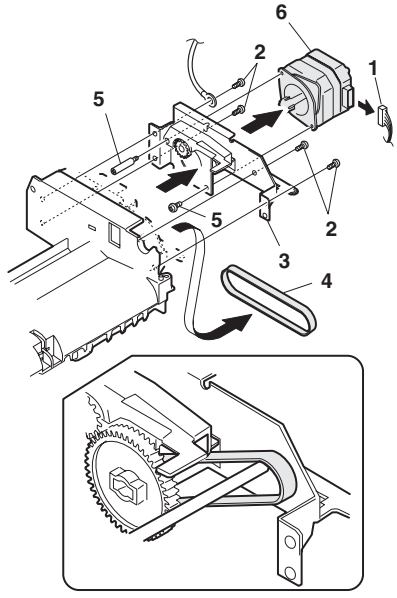

G. Paper entry sensor

1) Loosen the screw.
2) Open the paper exit PG.
3) Remove the paper entry sensor.
4) Remove the harness.

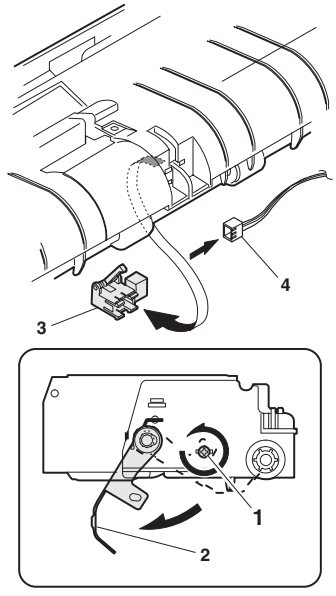

H. PS roller

1) Remove the parts.
2) Remove the PS roller.

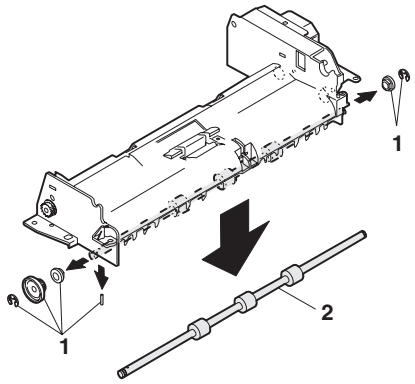

I. Paper exit roller

1) Remove the parts.
2) Remove the paper exit roller.

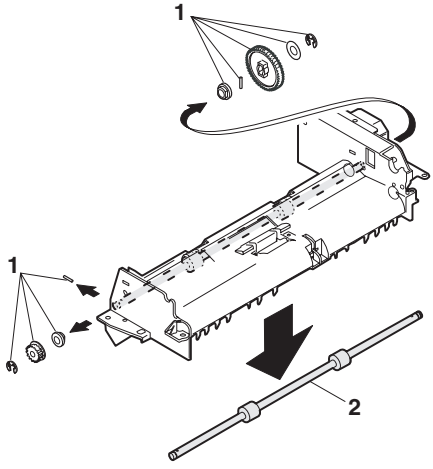

[4] AR-DE9

1. Disassembly and assembly

No.	Part name Ref.
A	Paper sensor
B	Cassette detection SW
C	Paper feed solenoid
D	Transport roller
E	Paper feed clutch
F	2nd paper feed roller

Paper feed unit removal

1) Remove the screw.
2) Remove the rear cover.

* When installing, engage the pawl and install the unit.

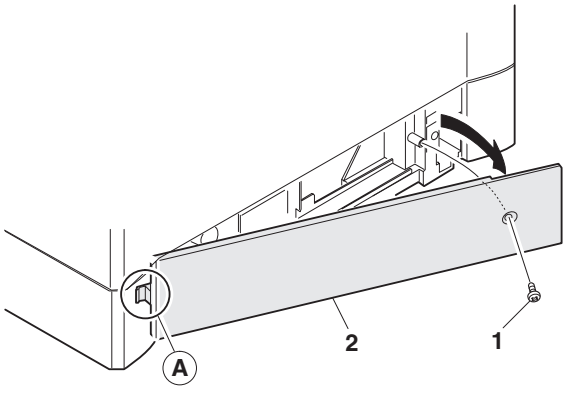

1) Open the right cabinet.
2) Remove three screws.
3) Remove one connector.
4) While tilting down the 2nd connection arm A, pull and remove the paper feed unit toward you.

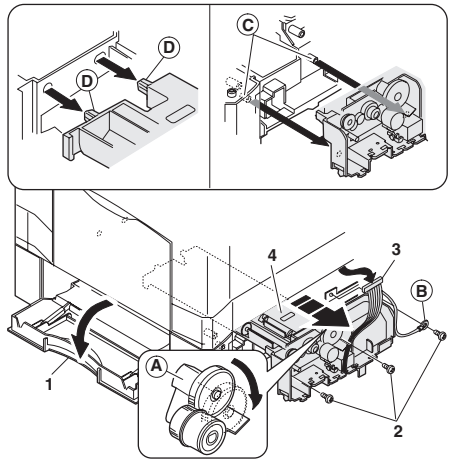

* When installing, securely insert two bosses C on the machine side and two bosses D on the paper feed unit side. Be sure to fix the earth B.

* Insert the 2nd page feed.

A. Paper sensor

1) Remove the pawl.
2) Remove the paper sensor.
3) Remove the harness.

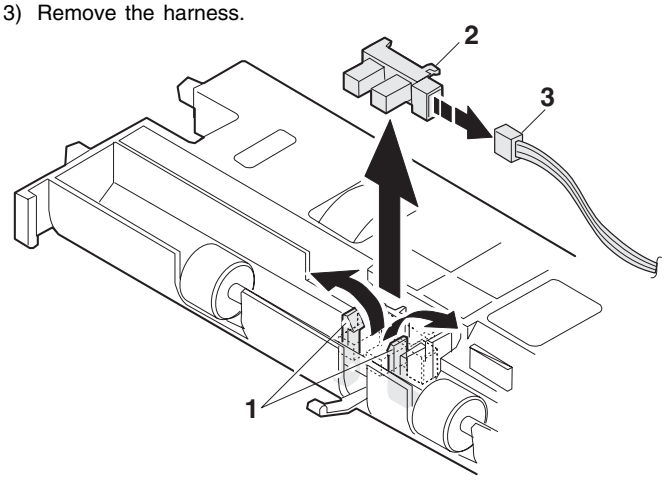

B. Cassette detection SW

1) Remove the pawl.
2) Remove the cassette detection SW.
3) Remove the harness.

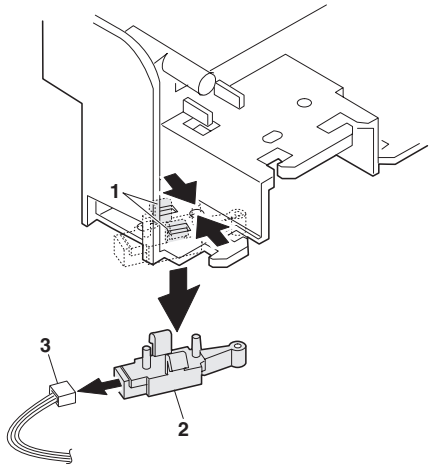

C. Paper feed solenoid

1) Remove the screw.
2) Remove the connector.
3) Remove the paper feed solenoid.

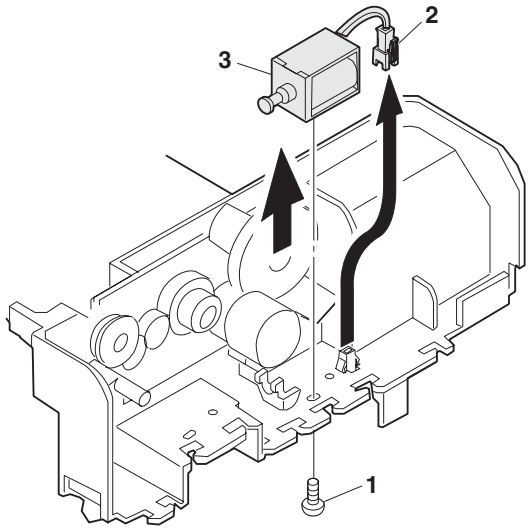

D. Transport roller

1) Remove two E-rings.
2) Remove the transport roller.

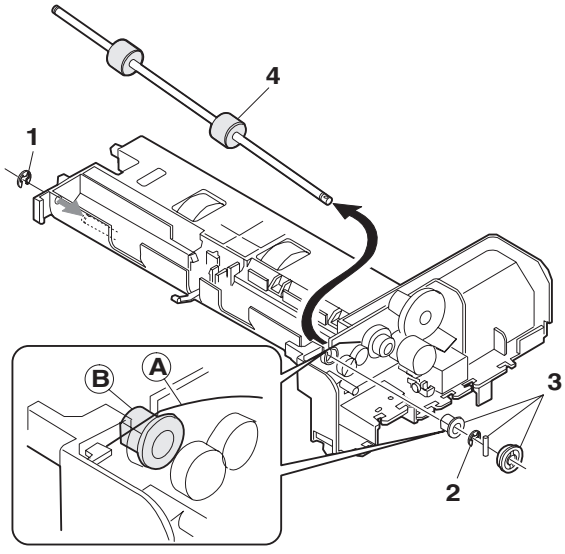

* Install so that the earth spring A is brought into contact over bearing B.

E. Paper feed clutch

1) Remove the E-ring.
2) Remove the paper feed clutch.
3) Remove the parts.

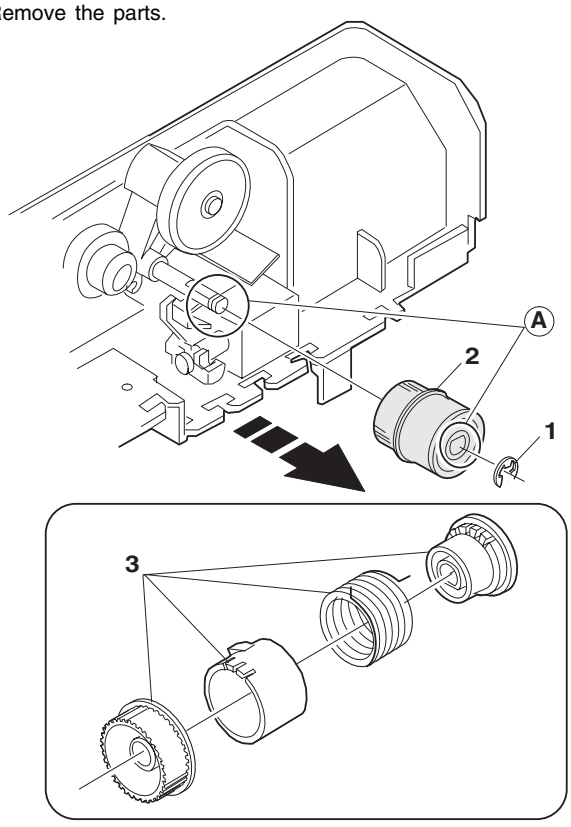

* When installing, fit the cut surface A.

F. 2nd paper feed roller

1) Remove the E-ring and the parts.
2) Remove the 2nd paper feed roller.

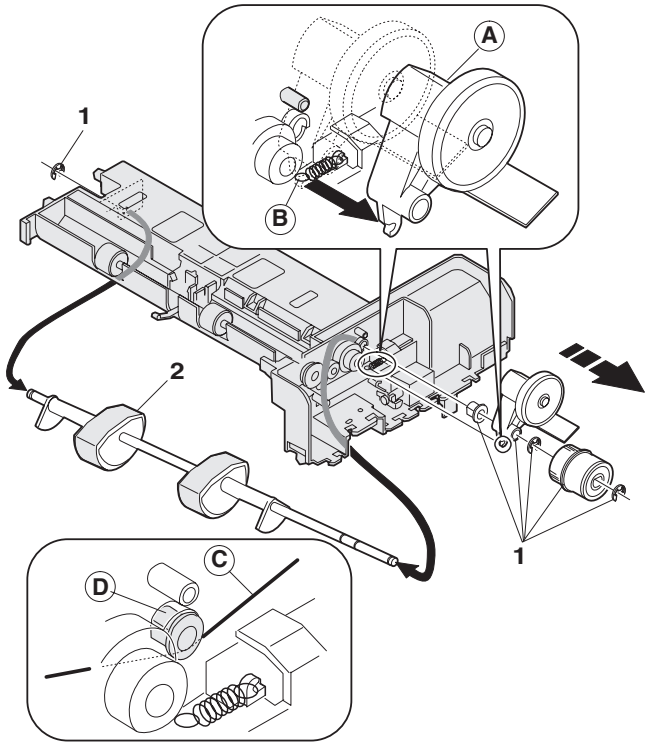

* When installing, hang the 2nd connection arm on the 2nd connection arm SP B. Be sure to install so that the earth spring C is in contact under the bearing D.

[5] AR-PG1

1. Electrical section

A. GDI/USB PWB

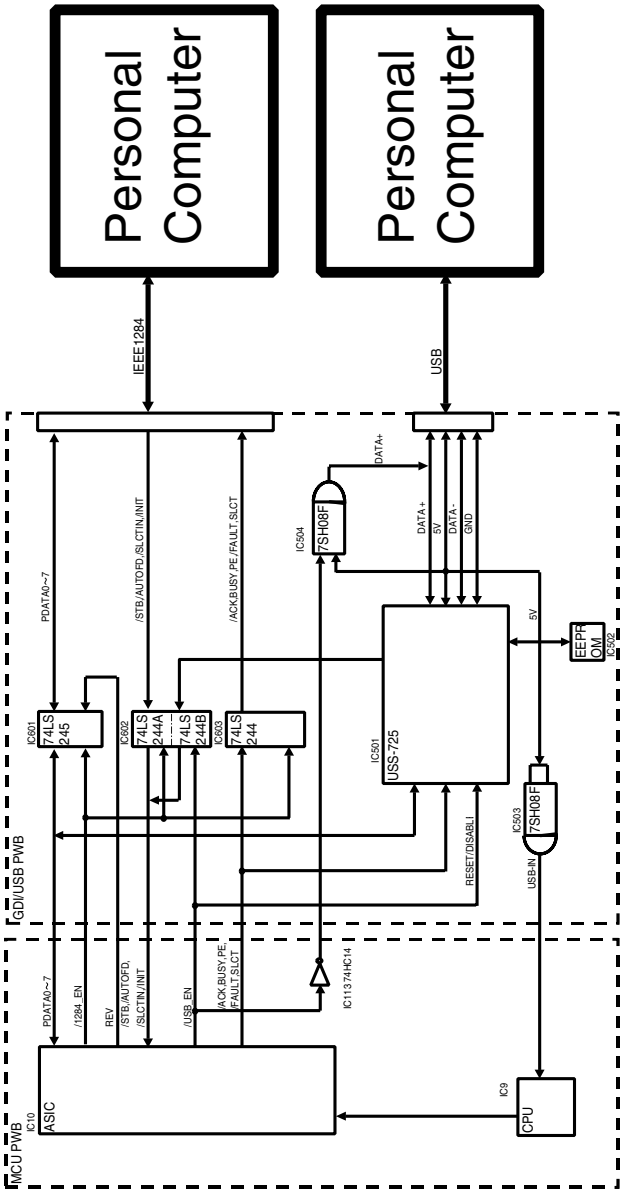

The GDI/USB PWB has two circuits; one for transmitting and receiving IEEE1284 signals and the other for transmitting and receiving USB signals and converting USB signals into IEEE1284 signals.

IC601, 602 and 603 are connected between IEEE1284 an ASIC to convert signals.

IC501 transmits and receives USB signals and converts USB signals into IEEE1284 signals.

IC502 stores various setup data necessary for USB operation of IC501.

IC503 informs the CPU of connection of USB. It is connected with PC via a USB cable. When 5V is inputted from PC to the IC's input pin, the output pin (signal name: USB-IN) is driven to HIGH to inform the CPU of connection of USB.

IC504 detects connection with PC via a USB cable, supplies power to the USB port signal line (signal name: DATA+) to enable USB communication.

When USB is connected, the CPU enables USB and disables IEEE1284.

(When USB is enabled, IE1284 is disabled.)

2. Interface

A. PARALLEL INTERFACE

This printer uses a bi-directional parallel interface. Use the supplied interface cable.

Connector

36-pin DDK 57LE-40360-730B (D29) female connector or equivalent connector

Cable

Shielded type bi-directional parallel interface

For best results,, use a printer interface cable which is IEEE1284 compliant.

Pin configuration

The pin numbers and signal names are listed in the following table.

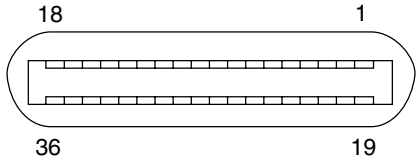

Pin No.	Signal name	Pin No.	Signal name
1	$\overline{\text{STB}}$	19	GND ($\overline{\text{STB}}$ RET)
2	DATA1	20	GND (DATA1 RET)
3	DATA2	21	GND (DATA2 RET)
4	DATA3	22	GND (DATA3 RET)
5	DATA4	23	GND (DATA4 RET)
6	DATA5	24	GND (DATA5 RET)
7	DATA6	25	GND (DATA6 RET)
8	DATA7	26	GND (DATA7 RET)
9	DATA8	27	GND (DATA8 RET)
10	$\overline{\text{ACKNLG}}$	28	GND ($\overline{\text{ACKNLG}}$ RET)
11	BUSY	29	GND (BUSY RET)
12	PE (Paper End)	30	GND (PE RET)
13	SLTC	31	INPRM
14	$\overline{\text{AUTO LF}}$	32	$\overline{\text{FAULT}}$
15	(NC)	33	(NC)
16	GND (0 V)	34	(NC)
17	FG	35	+5 V
18	+5 V	36	$\overline{\text{SLTC IN}}$

B. USB INTERFACE

Connector
4-pin DDK DUSB-BRA42-T11
Type-B connector

Cable
Shielded twisted pair cable
(2 m (6 feet) Max.: high-speed transmission equivalent)

Pin configuration
The pin numbers and signal names are listed in the following table.

Pin No.	Signal name
1	+5V
2	– DATA
3	+DATA
4	GND

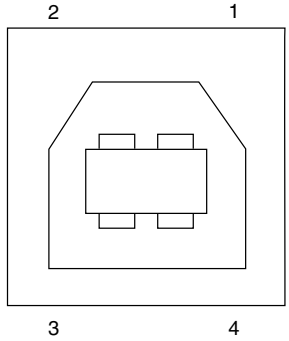

3. Print Area

The print area of this printer is shown below.

A. 600 dpi

Paper size	Dots						
	A	B	C	D	E	F	G
Letter	5100	4900	6600	6400	100	100	100
Legal	5100	4900	8400	8200	100	100	100
Invoice	3300	3100	5100	4900	100	100	100
A4	4960	4760	7014	6814	100	100	100
A5	3508	3308	4960	4760	100	100	100
B5	4298	4098	6070	5870	100	100	100
Folio	5100	4900	7800	7600	100	100	100
Foolscap	5100	4900	7440	7240	100	100	100

B. 300 dpi

Paper size	Dots						
	A	B	C	D	E	F	G
Letter	2550	2450	3300	3200	50	50	50
Legal	2550	2450	4200	4100	50	50	50
Invoice	1650	1550	2550	2450	50	50	50
A4	2480	2380	3507	3407	50	50	50
A5	1754	1654	2480	2380	50	50	50
B5	2149	2049	3035	2935	50	50	50
Folio	2550	2450	3900	3800	50	50	50
Foolscap	2550	2450	3720	3620	50	50	50

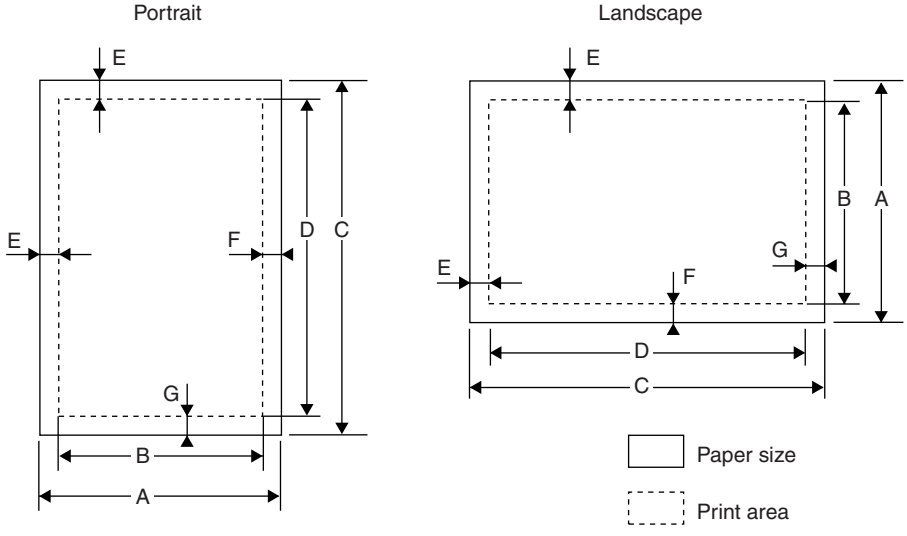

4. Circuit diagram

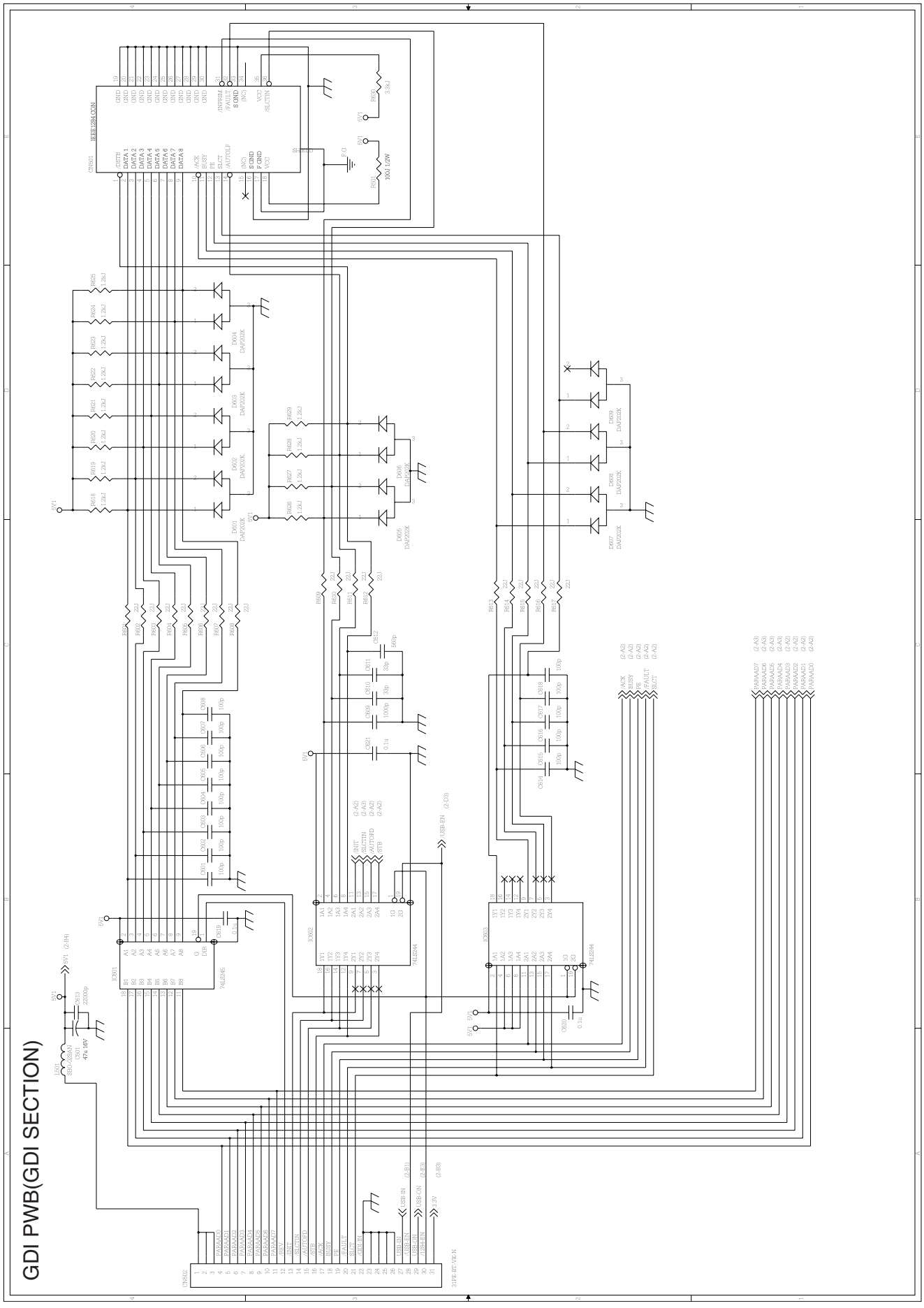

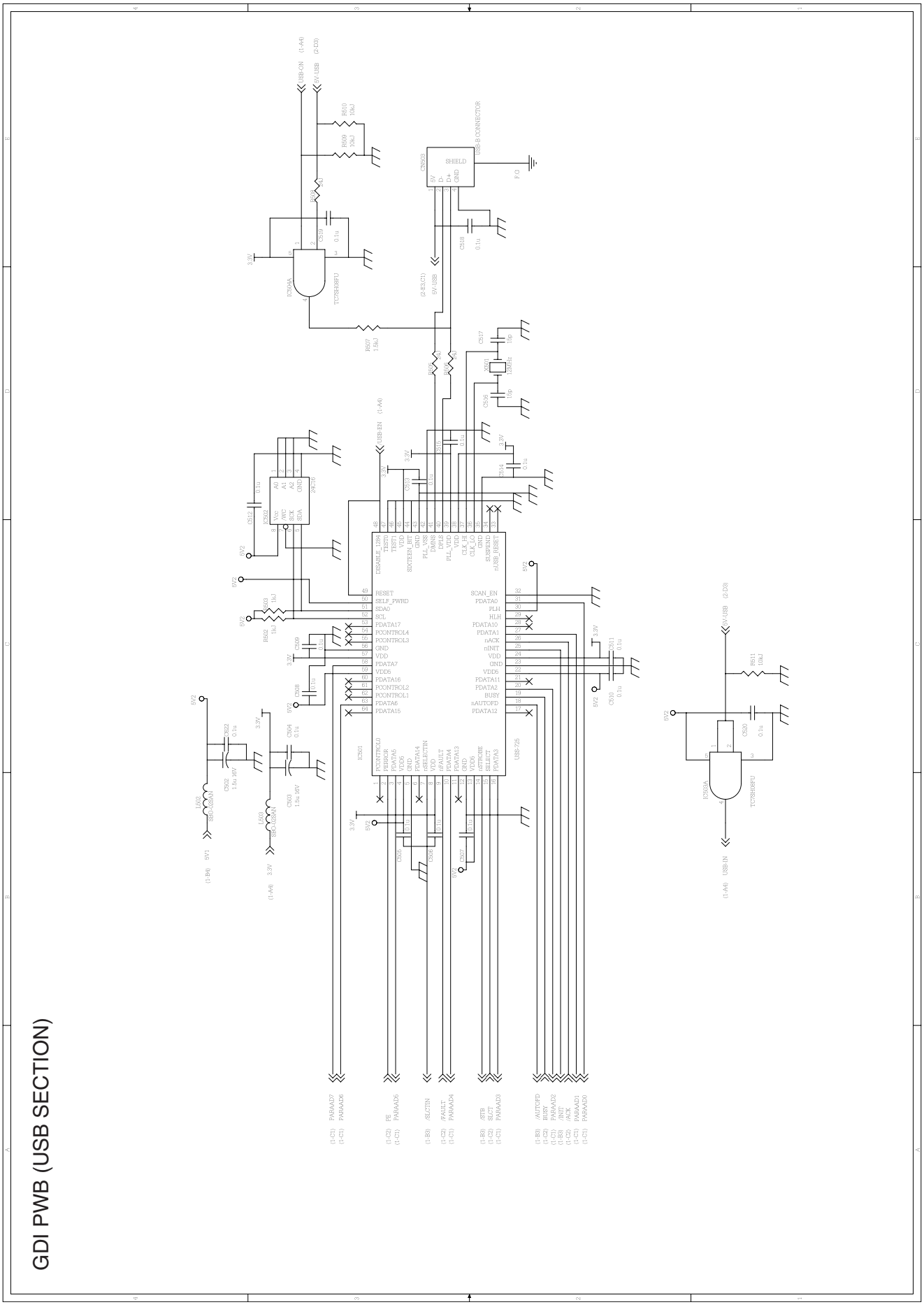

GDI PWB (USB SECTION)

SHARP

PARTS GUIDE

CODE:00ZAR150PT/P1

MODEL AR-SP3 AR-FX3 AR-DE9 AR-PG1

CONTENTS

1 AR-SP3-1(Exterors)

2 AR-SP3-2(Pick up unit)

3 AR-SP3-3(Transport unit)

4 AR-FX3-1(Base tray unit)

5 AR-FX3-2(Fax panel pick up unit)

6 AR-FX3-3(Fax transport unit)

7 AR-DE9(2nd frame unit)

8 AR-DE9(2nd paper feeding unit)

9 AR-SP3(Packing material & Accessories)

10 AR-FX3(Packing material & Accessories)

11 AR-DE9(Packing material & Accessories)

12 AR-PG1(Packing material & Accessories)

13 AR-FX3(Fax panel PWB)

14 AR-FX3(Fax PWB)

15 AR-PG1(GDI/USB PWB)

■ Index

SHARP CORPORATION

This document has been published to be used for after sales service only.
The contents are subject to change without notice.

DEFINITION

The definition of each Rank is as follows and also noted in the list

A : Parts necessary to be stocked as High usage parts.

B : Parts necessary to be stocked as Standard usage parts.

C : Low usage parts.

D : Parts necessary for refurbish.

E : Unit parts recommended to be stocked for efficient after sales service.
Please note that the lead time for the said parts may be longer than normal parts.

S : Consumable parts.

Please note that the following parts used in Copier under the same description are classified into A or B Rank depending upon the place used.

Example: Gear made of Metal, Sprocket, Bearing, Belt made of Rubber, Spring clutch mechanism.

A Rank : The parts which may be with the revolution or loading.

B Rank : Parts similar to A Rank parts, but are not included in Rank A.

Because parts marked with "⚠" is indispensable for the machine safety maintenance and operation, it must be replaced with the parts specific to the product specification.

○ Other than this Parts Guide, please refer to documents Service Manual (including Circuit Diagram) of this model.

○ Please use the 13 digit code described in the right hand corner of front cover of the document, when you place an order.

○ For U.S. only-Use order codes provided in advertising literature.
Do not order from parts department.

1 AR-SP3-1(Exterors)

NO.	PARTS CODE	PRICE RANK	NEW MARK	PART RANK	DESCRIPTION
1	LSŌU-0004QSZZ	AX		D	Original tray
2	LPLTP0011QSZZ	AH		C	Control plate F
3	LPLTP0012QSZZ	AH		C	Control plate R
4	NGERR0377FCZZ	AD		C	Manual feeding rack gear
5	XEPSD30P08X00	AA		C	Screw (3×8X)
6	NGERH0193FCZZ	AB		C	Manual feeding gear
7	MSPRP0059QSZZ	AD		C	Control plate spring
8	PCŌVP0036QSZZ	AK		D	Rack cover
11	CFRM-0011QS51	BE		E	SPF pick up unit
13	XEBSD40P10000	AA		C	Screw (4×10)
14	CFRM-0013QS51	BS		E	SPF transport unit
15	LBNDJ0013FCZ1	AA		C	Wire band
16	PSHEP0038QSZZ	AE		C	Base tray sheet
17	PSHEP0063QSZZ	AC		C	Transport sheet
18	MSPRP0113QSZ1	AD		C	Earth spring
19	PSHEP0037QSZ1	AE		C	OC mat sheet
20	XEBSD30P08000	AA		C	Screw (3×8)
21	MHNG-0003QSZZ	AX		C	SPF hinge L
22	XEBSE40P14000	AA		C	Screw (4×14)
23	NRŌLP0011QSZZ	AD		C	Delivery roller
24	PSPŌ-0001QSZZ	AB		C	Sponge
25	NSFTZ0010QSZZ	AE		C	Delivery shaft
26	MSPRT0061QSZZ	AC		C	Delivery spring
27	MSPRP0060QSZZ	AD		C	Transport spring
28	NRŌLP0010QSZZ	AD		C	Transport roller
29	NSFTZ0009QSZZ	AE		C	Transport shaft
30	LPLTM0096QSZZ	AF		C	Base tray reinforce plate
31	LX-BZ0016QSZZ	AC		C	Screw (3×8)
32	MHNG-0004QSZZ	AX		C	SPF hinge R
33	LSŌU-0005QSZ3	BB		D	Base tray
34	PCUSS0010QSZ1	AV		C	OC sheet
35	PSHEZ0102QSZZ	AD		C	Motor pressure sheet
36	PSHEZ0112QSZZ	AE		C	Delivery earth sheet SPF
37	MSPRC0149QSZZ	AC		C	PS earth spring SPF
501	CSŌU-0004QS51	BC		E	SPF original tray unit

1 AR-SP3-1(Exterors)

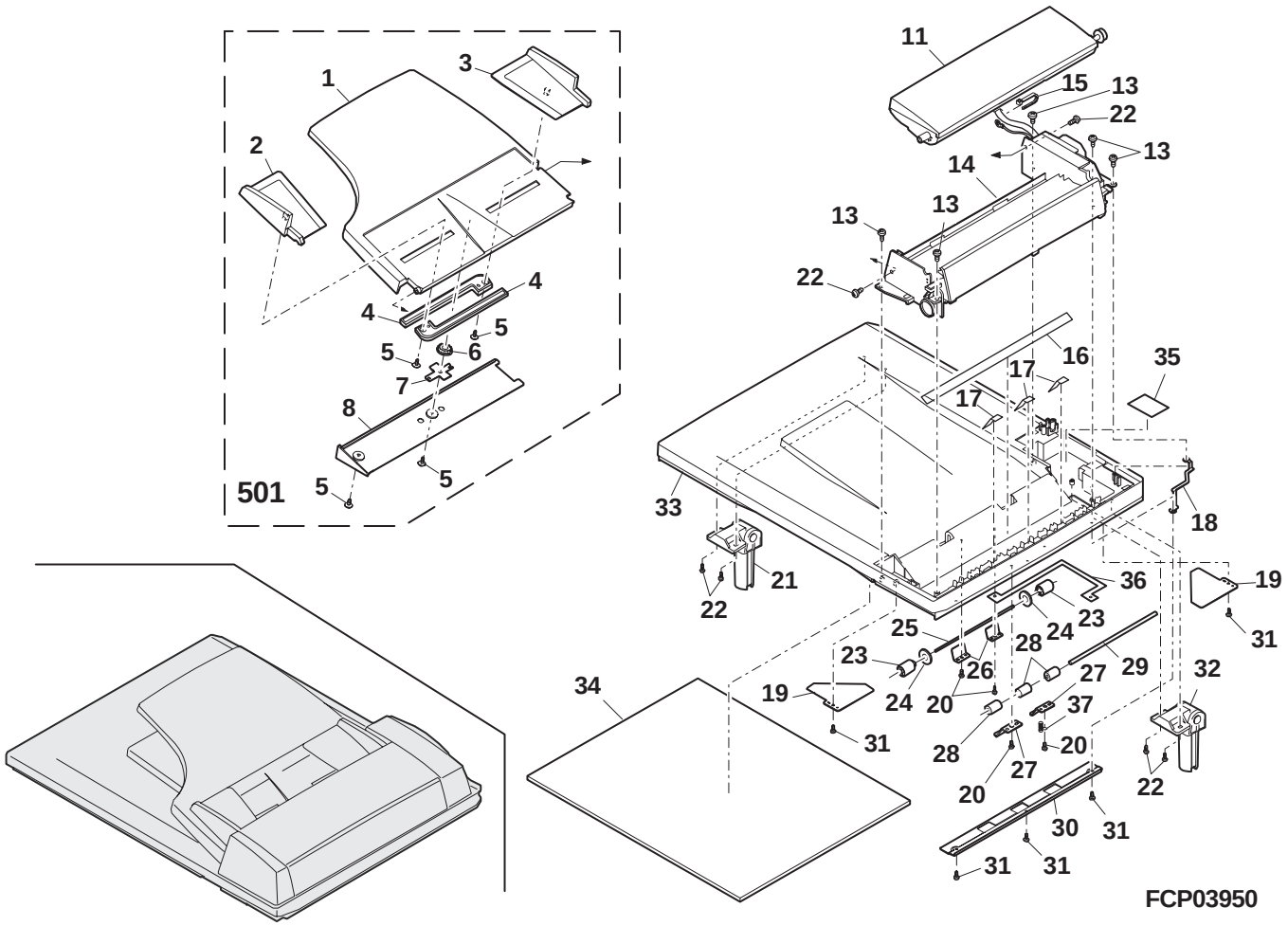

2 AR-SP3-2(Pick up unit)

NO.	PARTS CODE	PRICE RANK	NEW MARK	PART RANK	DESCRIPTION
1	GCAB−0008QSZZ	AM		D	Open and shut exterior
2	PSPÖ−0002QSZZ	AC		C	Stopper sponge
4	MARMP0003QSZ1	AD		C	Stopper arm
5	LSTPP0001QSZZ	AD		C	Paper stopper
6	XEBSD30P08000	AA		C	Screw (3×8)
7	CPWBF0009QS51	AG		E	SPF sensor PWB
8	DHAi−0055QSZZ	AK		C	Sensor harness
9	MLEVP0009QSZZ	AD		C	Set detect lever ACT
10	MLEVP0010QSZZ	AE		C	Open and shut detect lever ACT
11	RPLU−0004QSZ1	AQ		B	PU solenoid
12	XBPSD30P06KS0	AA		C	Screw (3×6KS)
13	MARMP0002QSZZ	AD		C	Solenoid arm
14	MSPRT0067QSZ1	AB		C	Solenoid arm spring
15	XRESP40−06000	AA		C	E type ring
16	NGERH0073QSZZ	AE		C	Clutch gear (20T)
17	PPiPP0008QSZZ	AD		C	SPF clutch sleeve
18	MSPRC1316FCZ1	AE		C	MF clutch spring B
19	LBÖSZ1508FCZZ	AG		C	Cam boss A2
20	LBSHZ0303FCZZ	AC		C	M bushing C
21	NSFTZ0012QSZZ	AG		C	Clutch shaft
23	NPLYZ0010QSZZ	AE		C	20MXL pulley
24	XRESP30−06000	AA		C	E type ring
25	MSPRT0066QSZ1	AC		C	Clutch pawl spring
26	PTME−0019QSZZ	AD		B	Clutch pawl
27	NRÖLP0024QSZZ	AL		C	Pick up roller
28	NGERH0990FCZZ	AB		C	Gear (16T)
29	XPSSP20−07000	AA		C	Spring pin (ϕ2-7)
30	NGERH0992FCZZ	AB		C	Gear (20T)
31	NRÖLR0922FCZZ	AR		C	Manual feeding roller
32	NSFTZ0011QSZZ	AG		C	PF shaft
33	MSPRC0115QSZZ	AB		C	Paper feeding spring
34	MARMP0004QSZZ	AF		C	Pick up arm
35	LFRM−0011QSZ1	AL	N	C	Paper feedind frame
36	MSPRD0114QSZ1	AD		C	PF frame spring
	(Unit)				
901	CFRM−0011QS51	BE		E	SPF pick up unit

2 AR-SP3-2(Pick up unit)

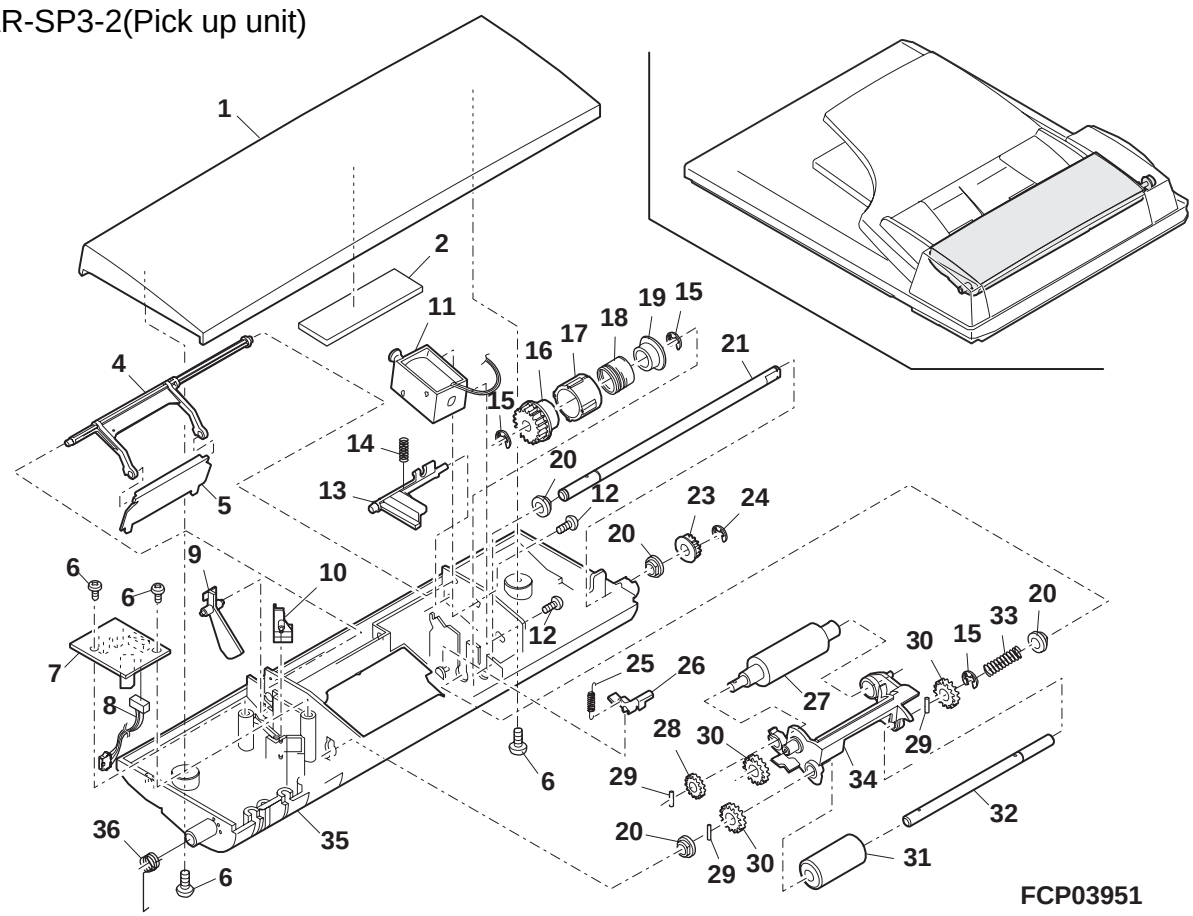

3 AR-SP3-3(Transport unit)

NO.	PARTS CODE	PRICE RANK	NEW MARK	PART RANK	DESCRIPTION
1	PGiDM0042QSZZ	AL		C	U-turn paper guide
2	XEBSD30P12000	AA		C	Screw (3×12)
3	LX−BZ0012QSZZ	AC		C	Screw
4	NGERH0972FCZZ	AB		C	Gear (27T)
5	MARMP0001QSZZ	AF		C	Drive arm
6	XBPSD30P05K00	AA		C	Screw (3×5K)
7	RMŌTP0013QSZZ	BB		B	SPF motor
8	DHAi−0084QSZ1	AT		C	Grand wire
9	DHAi−0054QSZZ	AR		C	SPF interface harness
10	LBNDJ0013FCZ1	AA		C	Wire band
11	MSPRT0064QSZ1	AC		C	Drive arm spring
12	LFRM−0013QSZZ	AG		C	Drive frame
13	XRESP50−06000	AA		C	E type ring
14	PSHEP3029FCZZ	AA		C	Flange sheet DUP2
15	NBLTT0006QSZZ	AG		B	Belt (83MXL4.8)
16	NGERH0047QSZZ	AF		C	Gear (48T/15T)
17	XPSSP20−09000	AA		C	Spring pin (ϕ2-9)
18	NBRGC0098FCZZ	AC		C	Bearing
19	NBRGM5006BCZZ	AB		C	Bearing
20	LFRM−0012QSZZ	AD		C	Frame R
21	PSHEZ0039QSZZ	AG		C	Sheet
22	LPLTP0013QSZZ	AD		C	Plate
23	MSPRC0062QSZZ	AC		C	Pressure spring
24	MSPRP0065QSZZ	AD		C	Open and shut lock spring
25	PSHEZ2174FCZZ	AB		C	Paper feeding sheet
26	NPLYZ0146FCZZ	AB		C	22MXL pulley
27	NBLTT0003QSZZ	AG		B	Belt (91MXL4.8)
28	JKNBZ0004QSZZ	AD		C	JAM release knob
29	MSPRC0063QSZZ	AB		C	Delivery paper guide spring
30	PGiDM0024QSZZ	AQ		C	Transport paper guide
31	RDTCT0004QSZZ	AL		B	Inlet detect sensor
32	NRŌLM0023QSZZ	AP		C	Delivery roller
33	PBRSR0003QSZZ	AL		B	Discharge brush
34	PGiDH0029QSZZ	AL		C	Delivery paper guide
35	PSHEP0044QSZZ	AF		C	White sheet
36	NRŌLM0022QSZZ	AP		C	PS roller
37	PCŌVP0037QSZZ	AH		D	Front cover
38	PCŌVP0038QSZZ	AL		D	Rear cover
39	XEBSD30P08000	AA		C	Screw (3×8)
40	RCŌRF1023LCZZ	AL		C	Core
	(Unit)				
901	CFRM−0013QS51	BS		E	SPF transport unit

3 AR-SP3-3(Transport unit)

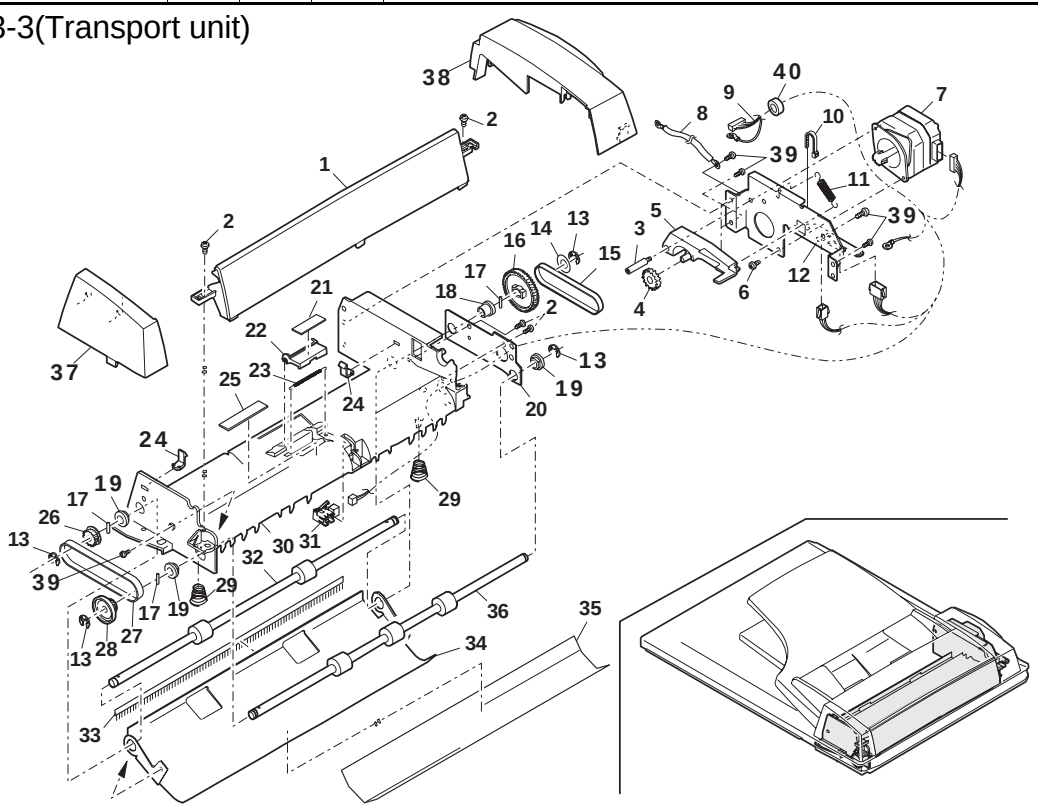

FCP03952

4 AR-FX3-1(Base tray unit)

NO.	PARTS CODE	PRICE RANK	NEW MARK	PART RANK	DESCRIPTION
1	LANGT0005QSZZ	AD		C	Shaft holding angle R
2	XEBSD30P10000	AA		C	Screw (3×10)
3	XEBSD40P10000	AA		C	Screw (4×10)
4	PGiDM0024QSZ2	AQ		C	Transport PG
6	LBNDJ0013FCZ1	AA		C	Wire band
8	LANGT0004QSZZ	AC		C	Shaft holding angle F
9	XEBSD30P12000	AA		C	Screw (3×12)
12	PSHEP0038QSZZ	AE		C	Base tray sheet
13	PSHEP0063QSZZ	AC		C	Transport sheet
14	PSHEZ0102QSZZ	AD		C	Motor pressure sheet
15	MSPRP0113QSZ1	AD		C	Earth spring
16	PSHEP0037QSZ1	AE		C	OC mat sheet
18	NRŌLP0011QSZZ	AD		C	Delivery roller
19	PSPŌ−0001QSZZ	AB		C	Sponge
20	NSFTZ0010QSZZ	AE		C	Delivery shaft
21	NSFTZ0009QSZZ	AE		C	Transport shaft
22	PSHEZ0112QSZZ	AE		C	Delivery earth sheet SPF
23	NRŌLP0010QSZZ	AD		C	Transport roller
24	MSPRT0061QSZZ	AC		C	Delivery spring
25	XEBSD30P08000	AA		C	Screw (3×8)
26	MSPRP0060QSZZ	AD		C	Transport spring
27	MSPRC0149QSZZ	AC		C	SPF earth spring
28	MHNG−0004QSZZ	AX		C	SPF hinge R
29	XEBSE40P14000	AA		C	Screw (4×14)
30	LPLTM0096QSZZ	AF		C	Base tray reinforce plate
31	LX−BZ0016QSZZ	AC		C	Screw (3×8)
32	MHNG−0003QSYZ	AX		C	SPF hinge L
33	PCUSS0010QSZ1	AV		C	OC sheet
34	LSŌU−0005QSZ3	BB		D	Base tray XC
35	PCŌVP0036QSZZ	AK		D	Rack cover
36	NGERH0193FCZZ	AB		C	UC manual feed gear
37	MSPRP0059QSZZ	AD		C	Control plate spring
39	XEPSD30P08X00	AA		C	Screw (3×8X)
41	NGERR0377FCZZ	AD		C	Manual feed gear
42	LPLTP0140QSZZ	AF		C	Reguration plate R- XC
43	LSŌU−0020QSZZ	AT		C	Document tray XC
44	LPLTP0139QSZZ	AF		C	Reguration plate F- XC

4 AR-FX3-1(Base tray unit)

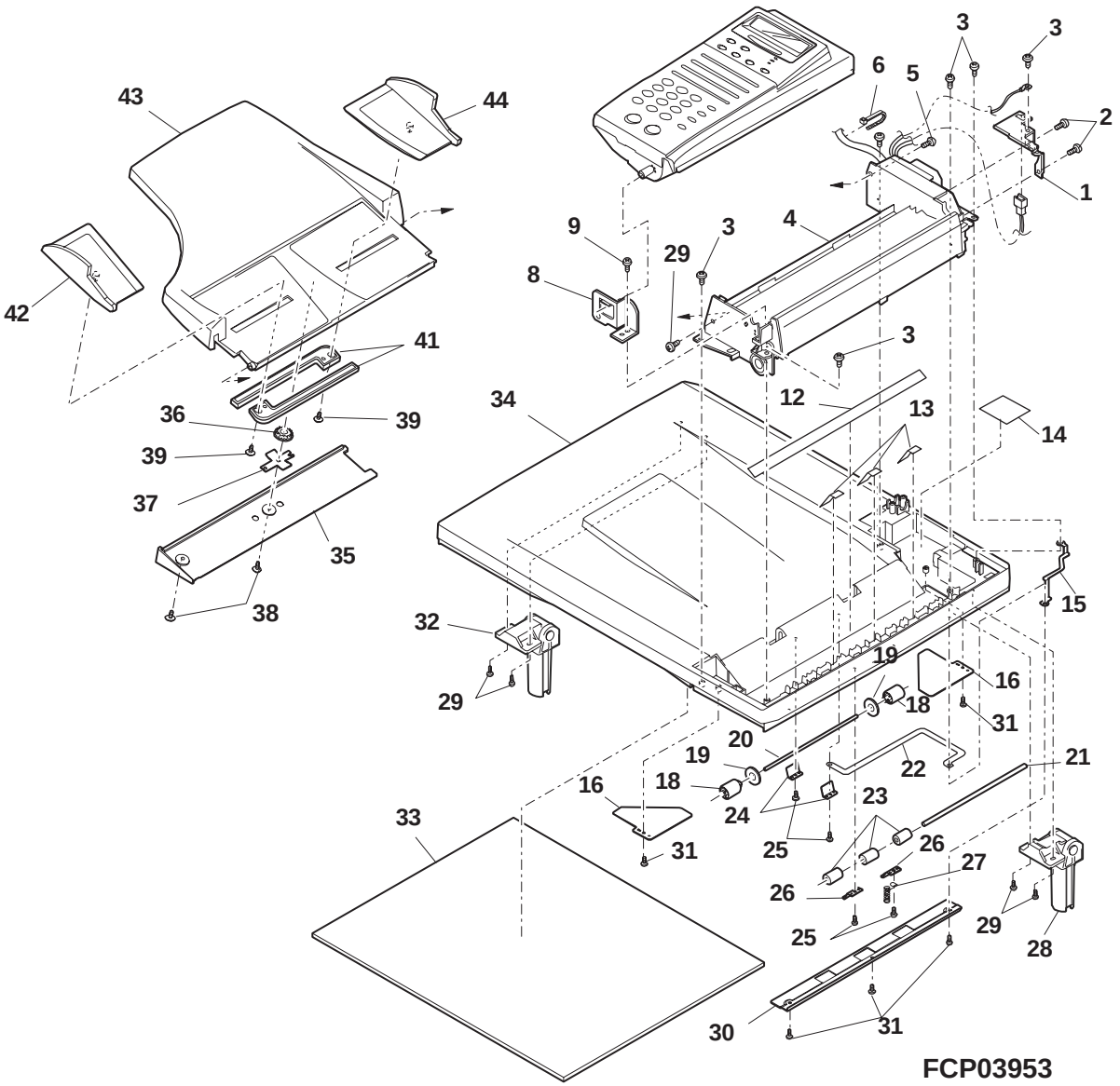

5 AR-FX3-2(Fax panel pick up unit)

NO.	PARTS CODE	PRICE RANK	NEW MARK	PART RANK	DESCRIPTION
1	PFiLW0009QSZZ	AL		C	FAX filter XC
2	CCAB-0027QS01	AS		C	Operation exterior FAX XC
3	JBTN-0039QSZZ	AE		C	Enter key XC
4	JBTN-0038QSZZ	AF		C	Function key XC
5	CBTN-0041QS01	AH		C	Stop key XC
6	CBTN-0040QS01	AH		C	Start key XC
7	JBTN-0036QSZZ	AF		C	One touch key XC
8	CBTN-0037QS01	AK		C	Ten key XC
9	CPWBF0046QS51	BH		E	FAX panel PWB
10	XEBSD26P06000	AA		C	Screw (2.6×6)
11	PSPŌ-0006QSZ1	AB		C	Stopper sponge
12	NSFTZ0012QSZZ	AG		C	Clutch shaft
13	XRESP40-06000	AA		C	E type ring
14	LBŌSZ1508FCZZ	AG		C	Cam boss A2
15	MSPRC1316FCZ1	AE		C	MF clutch spring B
16	PPiPP0008QSZZ	AD		C	SPF clutch sleeve
17	NGERH0073QSZZ	AE		C	Clutch gear (20T)
18	LBSHZ0303FCZZ	AC		C	M bushing C
19	MARMP0003QSZ1	AD		C	Stopper arm
20	LSTPP0008QSZZ	AD		C	Paper stopper F
21	RPLU-0017QSZZ	AQ		B	PU sorenoid FAX
22	MLEVP0009QSZZ	AD		C	Set detect lever ACT
23	MLEVP0010QSZZ	AE		C	Open and shut detect lever ACT
24	MSPRT0067QSZ1	AB		C	Solenoid arm spring
25	MARMP0002QSZZ	AD		C	Solenoid arm
26	LPLTP0150QSZZ	AG		C	FAX filter base
27	MLEVP0011QSZ1	AE		C	B4 actuator FAX
28	LFRM-0033QSZZ	AP		C	Paper feeding frame XC
29	PTME-0019QSZZ	AD		B	Clutch pawl N
30	MSPRT0066QSZ1	AC		C	Clutch pawl spring
31	XBPSD30P06KS0	AA		C	Screw (3×6KS)
32	NPLYZ0010QSZZ	AE		C	20MXL pulley
37	DHAi-0160QSZZ	AH		C	SPF sensor FAX
39	DHAi-0159QSZ1	AN		C	FAX opration harness
40	CPWBF0009QS52	AU		E	FAX sensor PWB
41	XEBSD30P08000	AA		C	Screw (3×8)
42	MARMP0004QSZZ	AF		C	Pick up arm
44	MSPRC0115QSZZ	AB		C	Paper feeding spring
45	NGERH0992FCZZ	AB		C	Gear (20T)
46	NRŌLR0922FCZZ	AR		C	Manual paper feed roller
47	XPSSP20-07000	AA		C	Spring pin (ϕ2-7)
48	NSFTZ0011QSZZ	AG		C	Paper feeding shaft
49	NRŌLP0024QSZZ	AL		C	Pick up roller
50	XRESP30-06000	AA		C	E type ring
51	NGERH0990FCZZ	AB		C	Gear (16T)

5 AR-FX3-2(Fax panel pick up unit)

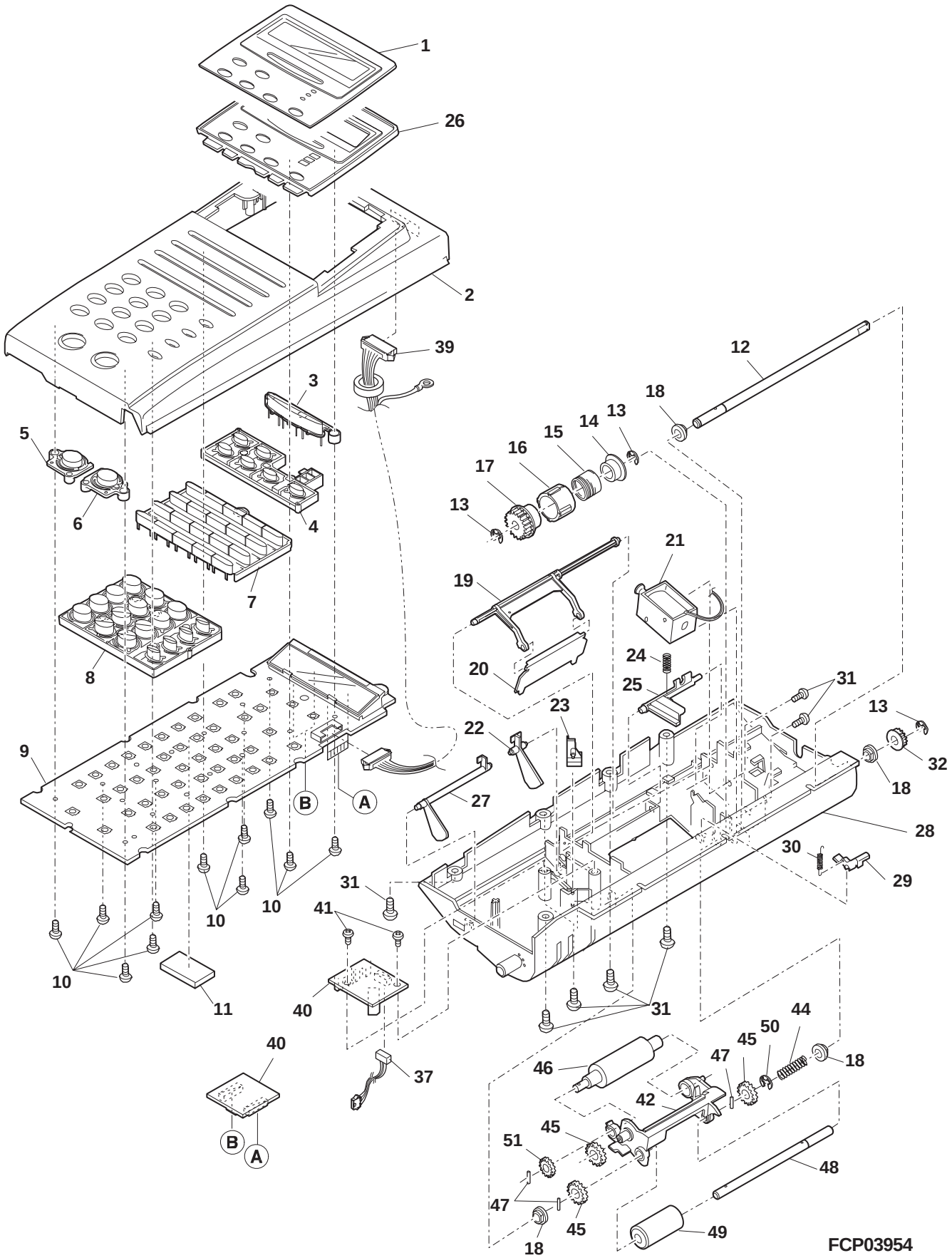

6 AR-FX3-3(Fax transport unit)

NO.	PARTS CODE	PRICE RANK	NEW MARK	PART RANK	DESCRIPTION
1	LPLTM0146QSZZ	AD		C	PG reinforce plate
2	XEBSD30P08000	AA		C	Screw (3×8)
3	PGiDM0058QSZZ	AK		C	U turn P/G XC
4	XEBSD30P12000	AA		C	Screw (3×12)
5	VSP50PB518P／／	AL		B	Speaker
6	XEPSD30P08X00	AA		C	Screw (3×8X)
7	PCŌVP0043QSZZ	AL		C	Rear cover XC
8	PCŌVP0042QSZZ	AH		C	Front cover XC
9	RMŌTP0013QSZZ	BB		B	SPF motor
10	LFRM−0013QSZZ	AG		C	Drive frame
11	MARMP0001QSZZ	AF		C	Drive arm
12	NGERH0972FCZZ	AB		C	Gear (27T)
13	LX−BZ0012QSZZ	AC		C	Screw
14	LBNDJ0013FCZ1	AA		C	Wire band
15	MSPRT0064QSZ1	AC		C	Drive arm spring
16	XEBSD30P08000	AA		C	Screw (3×8)
17	XBPSD30P05K00	AA		C	Screw (3×5K)
18	NBLTT0006QSZZ	AG		B	Belt (83MXL4.8)
19	XRESP50−06000	AA		C	E type ring
20	PSHEP3029FCZZ	AA		C	Flange sheet DUP2
21	NGERH0047QSZZ	AF		C	Gear (48T/15T)
22	XPSSP20−09000	AA		C	Spring pin (ϕ2-9)
23	NBRGC0098FCZZ	AC		C	Bearing R
24	XEBSD30P08000	AA		C	Screw (3×8)
25	NBRGM5006BCZZ	AB		C	Metal D (B-F6-7)
26	LFRM−0012QSZZ	AD		C	Frame R
27	PGiDM0024QSZ2	AQ		C	Transport PG
28	MSPRC0063QSZZ	AB		C	Delivery PG spring
29	NRŌLM0023QSZZ	AP		C	Delivery roller
30	NRŌLM0022QSZZ	AP		C	PS roller
31	PSHEZ0164QSZZ	AF		C	White sheet R
32	PGiDH0029QSZZ	AL		C	Delivery paper guide
33	PBRSR0003QSZZ	AL		B	Discharge brush
34	DHAi−0161QSZ2	BA		C	SPF intertface harness FAX
35	JKNBZ0004QSZZ	AD		C	JAM release knob
37	NBLTT0003QSZZ	AG		B	Belt (91MXL4.8)
38	NPLYZ0146FCZZ	AB		C	Pulley (22MXL)
41	MSPRP0065QSZZ	AD		C	Open and shut lock spring
42	PSHEZ2174FCZZ	AB		C	Paper feeding sheet
43	LPLTP0013QSZZ	AD		C	Plate
44	PSHEZ0039QSZZ	AG		C	Plape
45	MSPRC0062QSZZ	AC		C	Pressure spring
46	RDTCT0004QSZZ	AL		B	Inlet detect sensor
47	DHAi−0162QSZZ	AE		C	Speaker harness
50	PTUBP0119FCZZ	AB		C	MC protect tube

6 AR-FX3-3(Fax transport unit)

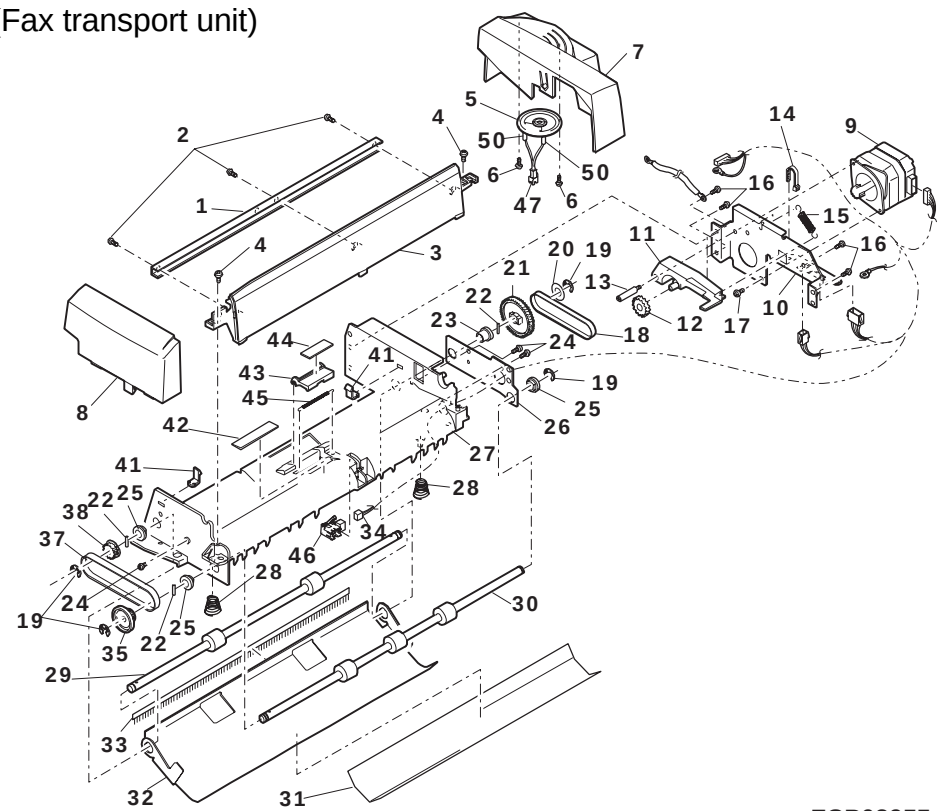

FCP03955

7 AR-DE9(2nd frame unit)

NO.	PARTS CODE	PRICE RANK	NEW MARK	PART RANK	DESCRIPTION
1	GCŌVA0005QSZZ	AM		D	Front cover
2	XEBSE40P12000	AA		C	Screw (4×12)
3	GCŌVA0006QSZZ	AN		D	Rear cover
4	PGiDM0016QSZZ	AY		C	Guide L
5	XEBSD40P12000	AA		C	Screw (4×12)
6	LPLTM0036QSZZ	AF		C	2ND joint plate R
7	GLEGG0064FCZZ	AC		D	Rubber foot
8	PGiDM0015QSZZ	AY		C	Guide R
9	MSPRC2544FCZZ	AC		C	2ND transport cover spring
10	GCŌVA0007QSZZ	AK		D	Transport cover
11	NRŌLP1060FCZZ	AF		C	U-turn roller
12	MSPRT0112QSZ1	AC		C	Transport collar spring
13	MARMP0012QSZZ	AD		C	2ND door arm
14	GCŌVA0008QSZZ	AK		D	Right cover
15	XHBSD40P08000	AA		C	Screw (4×8)
17	CFRM−0009QS53	BE		E	2nd paper feeding unit
18	DHAi−0053QSZZ	AM		C	2CS interface harness

7 AR-DE9(2nd frame unit)

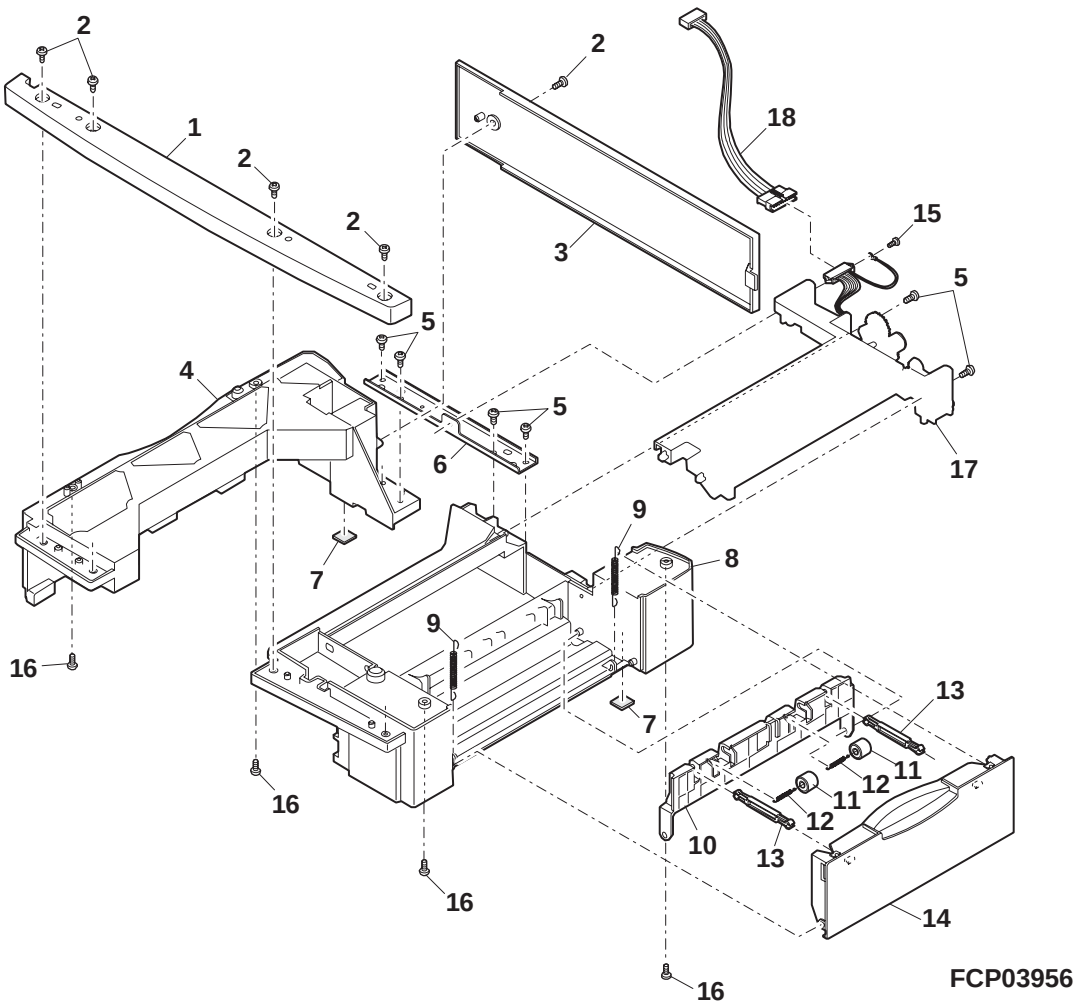

8 AR-DE9(2nd paper feeding unit)

NO.	PARTS CODE	PRICE RANK	NEW MARK	PART RANK	DESCRIPTION
1	NRŌLP0019QSZ1	AP		C	Transport roller
2	NBRGZ1043HCZZ	AD		C	Bearing (B-F5-13)
3	XRESP40−06000	AA		C	E type ring
5	NGERH0992FCZZ	AB		C	Gear (20T)
6	XPSSP20−07000	AA		C	Spring pin (ϕ2-7)
7	LBŌSZ1031FCZZ	AC		C	Clutch boss
8	MSPRC0161QSZZ	AF		C	Clutch spring
9	PPiPP0007QSZZ	AD		C	Clutch pipe
10	NGERH1132FCZZ	AH		C	Clutch gear (29T)
11	NGERH1207FCZZ	AF		C	Joint gear (40T)
12	MARMP0229FCZZ	AE		C	Joint arm
13	MSPRC2545FCZZ	AB		C	2nd joint arm spring
14	DHAi−0158QSZZ	AN		C	2nd harness
15	VHPGP1A71A1−1	AG		B	Photo sensor (GP1A71A1)
16	MLEVP0033QSZZ	AF		C	PPDI actuator
17	MSPRD0058QSZZ	AG		C	Earth spring
18	RPLU−0010QSZZ	AN		B	PF solenoid
19	XHBSD30P06000	AA		C	Screw (3×6)
20	PTME−0008QSZZ	AD		C	PF clutch pawl
21	MSPRC2546FCZZ	AB		C	2nd clutch pawl spring
22	NGERH0041QSZZ	AF		C	2nd gear ID (18T/26T)
23	NGERH0990FCZZ	AB		C	Gear (16T)
24	QSW−B0003QSZZ	AF		B	Tray detect switch
25	CRŌLP0015QS01	AU		C	Paper feeding roller
26	LFRM−0009QSZ2	AQ		D	Paper feeding frame
27	MLEVP0050QSZZ	AD		C	Actuator lever
28	MSPRD0159QSZZ	AC		C	2nd actuator spring
29	XWHSD30−08160	AA		C	Washer
30	XEBSD30P08000	AA		C	Screw (3×8)
31	LBNDJ0013FCZ1	AA		C	Wire band
	(Unit)				
901	CFRM−0009QS53	BE		E	2nd paper feeding unit

8 AR-DE9(2nd paper feeding unit)

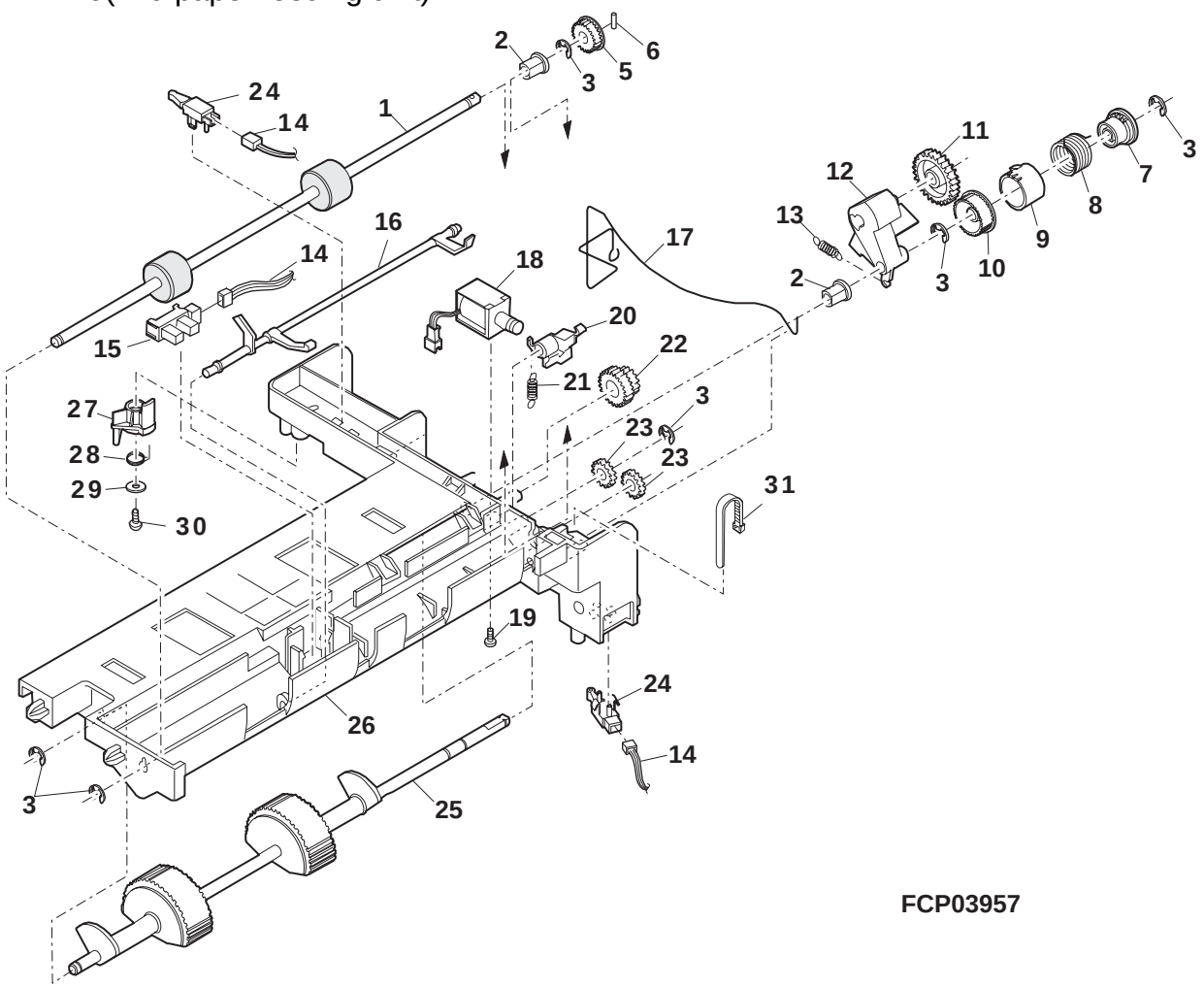

9 AR-SP3(Packing material & Accessories)

NO.	PARTS CODE	PRICE RANK	NEW MARK	PART RANK	DESCRIPTION
1	S S A K A 0 0 1 9 S C Z Z	A A		D	Vinyl bag (120×180mm)
2	T C A D Z 0 0 7 5 Q S Z Z	A E	N	D	Card
3	S P A K A 0 2 2 1 Q S Z Z	A E	N	D	Spacer
4	S S A K H 3 0 1 2 K C Z Z	A D		D	Vinyl bag (790×740mm)
5	S P A K A 0 2 1 9 Q S Z Z	A P	N	D	Packing add L
6	S P A K A 0 2 2 0 Q S Z Z	A Q	N	D	Packing add R
7	S P A K C 0 2 2 2 Q S Z Z	A T	N	D	Packing case
8	P C U S S 0 0 1 0 Q S Z 1	A V		C	OC mat
9	R C Ō R F 0 0 2 2 F C Z Z	A Q		C	Ferrite core
10	L B N D J 0 0 1 3 F C Z 1	A A		C	Band
11	X B B S E 3 0 P 0 8 0 0 0	A A		C	Screw (3×8)
12	S S A K A 2 0 1 1 K C Z Z	A A		D	Vinyl bag
13	D U N T − 0 0 8 4 Q S 1 1	A U		E	DSPF sensor unit
14	P G i D M 0 0 1 9 Q S Z Z	A H		C	Hinge guide L
15	P G i D M 0 0 2 0 Q S Z Z	A H		C	Hinge guide R
16	S S A K A 3 4 4 2 Q C Z Z	A B		D	Vinyl bag (340×450mm)

9 AR-SP3(Packing material & Accessories)

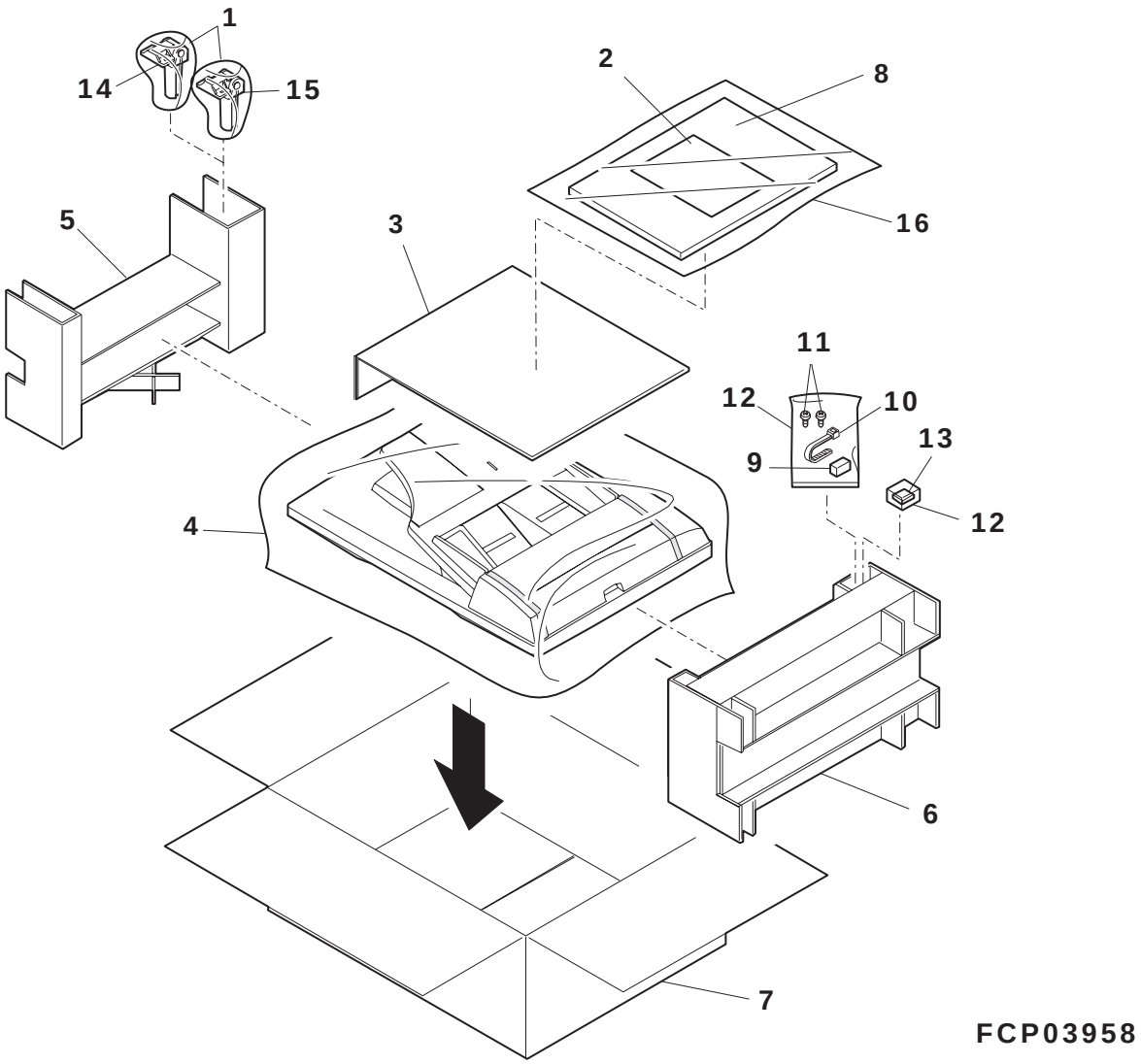

10 AR-FX3(Packing material & Accessories)

NO.	PARTS CODE	PRICE RANK	NEW MARK	PART RANK	DESCRIPTION
1	PCUSS0010QSZ1	AV		C	OC mat
3	TCADZ0076QSZZ	AE	N	D	Card
4	SPAKA0227QSZZ	AE	N	D	Spacer B
5	TiNSE0258QSZZ	AX	N	D	Operation manual
6	SPAKA0226QSZZ	AE	N	D	Spacer A
7	SPAKA0224QSZZ	AQ	N	D	Packing add L
8	SSAKH3012KCZZ	AD		D	Vinyl bag (790×740mm)
9	SPAKC0229QSZZ	AT	N	D	Packing case
10	XHBSE30P08000	AA		C	Screw (3×8)
12	SSAKA2011KCZZ	AA		D	Vinyl bag
13	SPAKA0225QSZZ	AQ	N	D	Packing add R
14	SSAKA0019SCZZ	AA		D	Vinyl bag (120×180mm)
15	SPAKA399ACCZZ	AB		D	Vinyl bag
16	SPAKA0228QSZZ	AE	N	D	Protect sheet
17	PCŌVP0046QSZZ	AF		D	Line cover A
18	PCŌVP0045QSZZ	AL		D	PWB cover
19	PGiDM0019QSZZ	AH		C	Hinge guide L
20	PGiDM0020QSZZ	AH		C	Hinge guide R
21	SSAKA3442QCZZ	AB		D	Vinyl bag (340×450mm)
22	DUNT-0084QS11	AU		E	DSPF sensor unit
101	QCNW-7197XCZZ	AH		B	Line cable
102	TLABH0152QSZZ	AD	N	C	Label

10 AR-FX3(Packing material & Accessories)

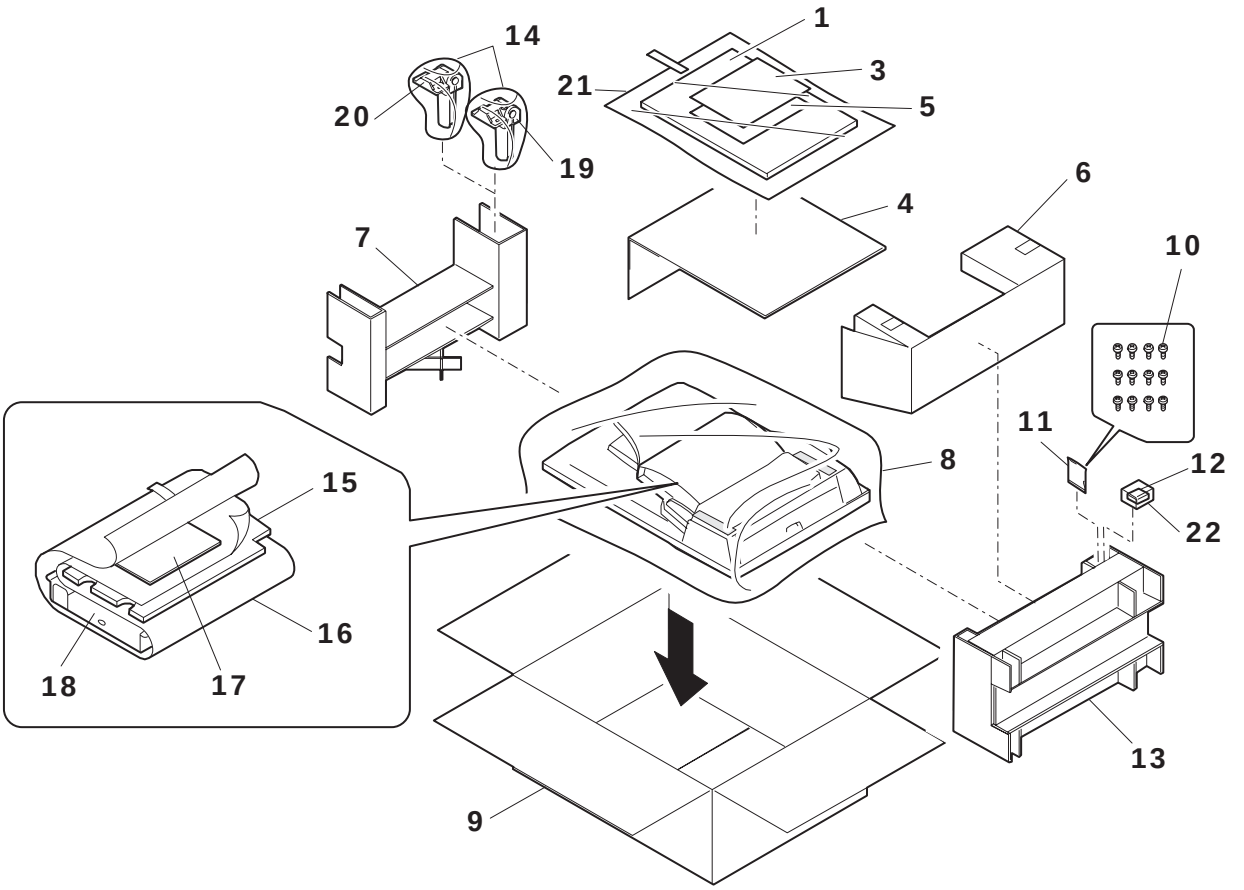

FCP3959

11 AR-DE9(Packing material & Accessories)

NO.	PARTS CODE	PRICE RANK	NEW MARK	PART RANK	DESCRIPTION
1	TTAG−0002QSZZ	AB	N	C	Tray rotation tag
2	LHLDW1226FCZZ	AB		C	Holder
3	TCADZ0077QSZZ	AE	N	D	Card
4	SPAKA5108FCZZ	AF		D	Packing add
5	SSAKH0021SCZZ	AC		D	Vinyl bag
6	SPAKC0223QSZZ	AQ	N	D	Packing case
7	XEBSE40P12000	AA		C	Screw (4×12)
8	XEBSE40P16000	AA		C	Screw (4×16)
9	SSAKA2011KCZZ	AA		D	Vinyl bag

11 AR-DE9(Packing material & Accessories)

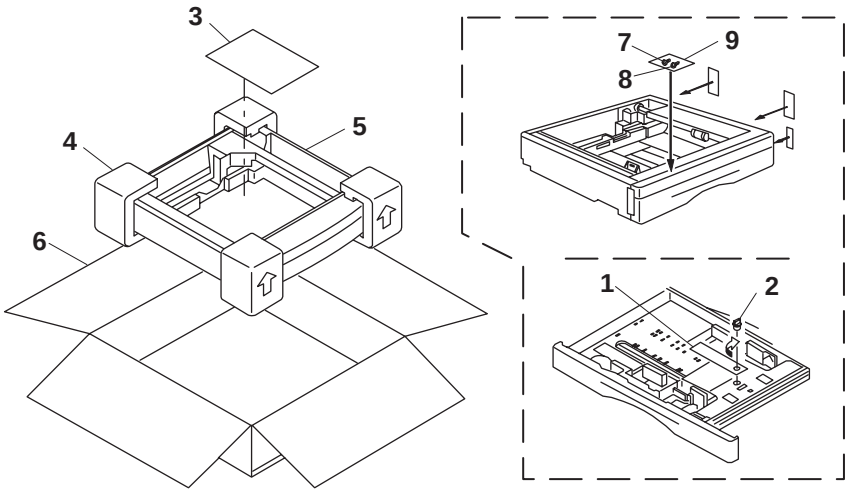

FCP03960

12 AR-PG1(Packing material & Accessories)

NO.	PARTS CODE	PRICE RANK	NEW MARK	PART RANK	DESCRIPTION
1	SPAK−548ECCZZ	AB		D	Vinyl bag (140×260mm)
2	SPAKA5824FCZZ	AF	N	D	Protect sheet
3	DHAi−0173QSZZ	AE	N	C	GDAI harness
4	XBBSE30P08000	AA		C	Screw (3×8)
5	SSAKA0019SCZZ	AA		D	Vinyl bag (120×180mm)
6	DUNT−0130QSZ1	AL	N	D	CD-ROM
7	TCADZ0078QSZZ	AH	N	D	Card
8	SPAKC0231QSZZ	AG		D	Packing case
9	TiNSE0305QSZZ	AY	N	D	Operation manual

12 AR-PG1(Packing material & Accessories)

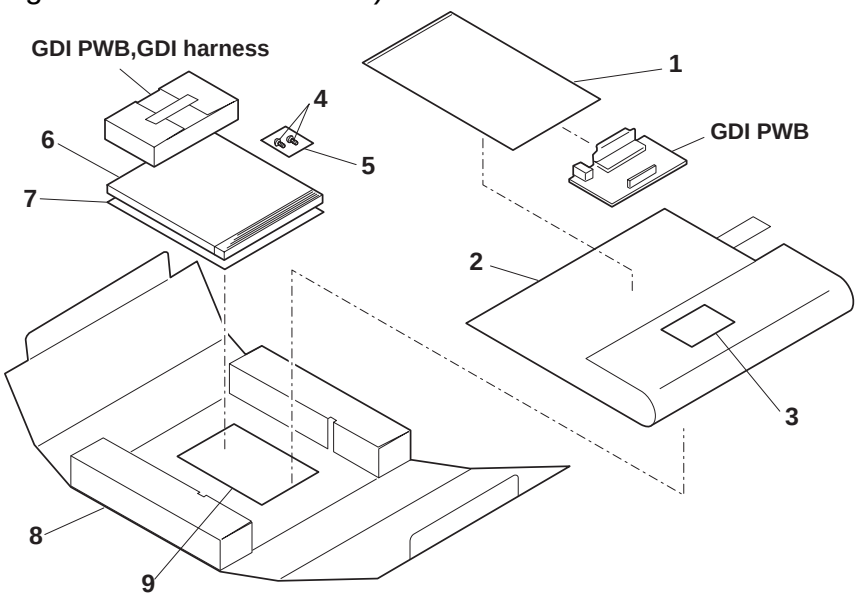

FCP3961

13 AR-FX3(Fax panel PWB)

NO.	PARTS CODE	PRICE RANK	NEW MARK	PART RANK	DESCRIPTION
1	PSPAF0013QSZZ	AD		C	LCD spacer
2	QCNCM0811FCZZ	AC		C	Connector (9pin) [CN701]
3	QSW-P0005QSZZ	AC		B	Tact swtch (B3F-6102) [S701~747]
4	RCRMZ0002QSZZ	AE		C	Crystal [Y701]
5	RVR-B1440QCZZ	AF		B	Volume (RK09J11TO) [VR701]
6	VCCCTV1HH471J	AA		C	Capacitor (50WV 470pF) [C705~707]
7	VCEAJU1CW226M	AB		C	Capacitor (16WV 22μF) [C702,703]
8	VCKYTV1EB104K	AA		C	Capacitor (25WV 0.10μF) [C701,704,711,712,714~718]
9	VHDDAN202U/-1	AB		B	Diode (DAN202U) [D704,705]
10	VHDDAP202U/-1	AB		B	Diode (DAP202U) [D706,707]
11	VHiHD4074344/	AX		B	CPU (HD4074344) [IC701]
12	VHiNJM431U/-1	AF		B	IC (NJM431U) [IC703]
13	VHP1LHLE-002A	AC		B	LED (1LHLE-002A) [D701~703]
14	VRS-TP2BD000J	AA		C	Resistor (1/8W 0Ω ±5%) [J701~746]
15	VRS-TS2AD101J	AA		C	Resistor (1/10W 100Ω ±5%) [R750]
16	VRS-TS2AD102J	AA		C	Resistor (1/10W 1.0KΩ ±5%) [R716~729,740~742]
17	VRS-TS2AD103J	AA		C	Resistor (1/10W 10KΩ ±5%) [R730]
18	VRS-TS2AD105J	AA		C	Resistor (1/10W 1MΩ ±5%) [R739]
19	VRS-TS2AD202J	AA		C	Resistor (1/10W 2KΩ ±5%) [R752]
20	VRS-TS2AD203J	AA		C	Resistor (1/10W 20KΩ ±5%) [R701~715,734~737,748,749]
21	VRS-TS2AD242F	AB		C	Resistor (1/10W 2.4KΩ ±1%) [R733]
22	VRS-TS2AD272F	AA		C	Resistor (1/10W 2.7KΩ ±1%) [R732]
23	VRS-TS2AD391J	AA		C	Resistor (1/10W 390Ω ±5%) [R745~747]
24	VRS-TX2HD511J	AB	N	C	Resistor (1/2W 510Ω ±5%) [R731]
25	VSDTA143EK/-1	AB		B	Transistor (DTA143EK) [Q701]
26	VVLHLM3212-01	BA		E	(HLM3212) [IC702]
	(Unit)				
901	CPWBF0046QS51	BH		E	Fax panel PWB

14 AR-FX3(Fax PWB)

NO.	PARTS CODE	PRICE RANK	NEW MARK	PART RANK	DESCRIPTION
1	VHi27C08001QS	BA	N	B	IC (27C08002QS) [IC502]
2	PSHEZ0190QSZZ	AD		C	Sheet
3	QCNCM7022SC1J	AE		C	Connector [CN501]
4	QCNCW0034QSZZ	AL		C	Connector [CN601]
5	QJAKT7004XCZZ	AH		C	Connector [CN502]
6	QSŌCZ0051FCZZ	AD		C	IC socket (DICF-42C-E) [IC502]
7	RC-DZ1080RC0L	AR		C	Capacitor (EECS5R5H105) [C515]
8	RC-K1E104HCZT	AA	N	C	Capacitor (25WV 0.1μF) [CN501~610]
9	RC-KZ1053RC1E	AC		C	Capacitor (25WV 1μF) [C656]
10	RCiLZ0007QSZZ	AF		C	Choke coil [L521]
11	RCiLZ1032CCZZ	AD		C	Coil (SBO-02SAN) [L501,503,504,505,511~516,522~526]
12	RCiLZ1063YCZZ	AC		C	Coil (ACB1608M-60) [L608]
13	RCiLZ7009XCZZ	AC		C	Coil (ACB2012M) [L601,603~605,609]
14	RCRSP6676RCZZ	AG		B	Crystal (32.768KHz) [Y501,502]
15	RCRSZ0013QSZZ	AP		B	Crystal (49.192MHZ) [Y503]
17	RFiLZ0002QSZZ	AG		C	Filter (LF1290-102) [L506,507]
18	RFiLZ0005QSZZ	AC	N	C	Filter (ZJ5501-470TK) [L502]
19	RMPTW4103QCJJ	AB		B	Block resistor (10KΩ×4 1/32W ±5%) [BR549,550]
20	RMPTW4220QCJJ	AB		B	Block resistor (22Ω ×4) [BR501,502,507,510,513,514,520,521,522~525,527~541,543,545~548,551~554]
21	RMPTW4223QCJJ	AB		B	Block resistor (22KΩ×4) [BR508,509,542,544]
22	RMPTW4390QCJJ	AA		B	Block resistor (1/32W 39Ω×4) [BR503~506,511,512,555~561,526]
23	RRLYD3213QCZZ	AH		B	Relay (OUAZ-SH-112) [RY501]
24	RTRNZ0009QSZZ	AQ		B	Transformer [T501]
25	UBATL2034SCZZ	AH		B	Battery (CR2354) [BT501]
26	VCCCCY1EH102J	AB		C	Capacitor (1608Type/1000pF/CH) [C623]
27	VCCCCY1HH101J	AA		C	Capacitor (50WV 100pF) [C626,635]
28	VCCCCY1HH180J	AA		C	Capacitor (50WV 18pF) [C620]
29	VCCCCY1HH201J	AA		C	Capacitor (50WV 200pF) [C639,650,655]
30	VCCCCY1HH220J	AA		C	Capacitor (50WV 22pF) [C613,614]
31	VCCCTQ1HH332J	AC		C	Capacitor (50WV 3300pF) [C624]
32	VCCCTV1HH330J	AA		C	Capacitor (50WV 33pF)
33	VCEAGA0JW107M	AC		C	Capacitor (16WV 100μF) [C546,557,559,561~563,569]
34	VCEAGA1AW226M	AB		C	Capacitor (10WV 22uF) [C506,509,528,529,531,540,541,554,565,568,572,573]
35	VCEAGA1CW106M	AA		C	Capacitor (16WV 10μF) [C510,513,519,567]
36	VCEAGA1CW107M	AC		C	Capacitor (16WV 100μF) [C516,560,564]
37	VCEAGA1CW226M	AB		C	Capacitor (16WV 22μF) [C558]
38	VCEAGA1CW476M	AB		C	Capacitor (16WV 47μF) [C566]
39	VCFYEG2EA223M	AE		C	Capacitor (250WV 0.022μF) [C505]
40	VCFYJU2EA334K	AD		C	Capacitor (250WV 0.33μF) [C555]
41	VCFYJU2EA824K	AE		C	Capacitor (250WV 0.82μF) [C517,571]

14 AR-FX3(Fax PWB)

NO.	PARTS CODE	PRICE RANK	NEW MARK	PART RANK	DESCRIPTION
42	VCKYCY1CB333K	AB		C	Capacitor (16WV 0.033μF) [C538]
43	VCKYCY1CF104Z	AA		C	Capacitor (16WV 0.10μF) [C501~504,507,508,511,512,514,520,521,523,524,527,532~537,542~545,547~553,556,570]
44	VCKYCY1EF104Z	AA		C	Capacitor (25WV 0.10μF) [C601,602,608~610,612,615~619,625,628,630~634]
	VCKYCY1EF104Z	AA		C	Capacitor (25WV 0.10μF) [C636~638,640~649,651~654,657~660,664]
45	VCKYCY1HB103K	AA		C	Capacitor (50WV 0.010μF) [C611,662,663]
46	VCKYCY1HB331K	AA		C	Capacitor (50WV 330pF) [C539]
47	VCKYCY1HF473Z	AA		C	Capacitor (50WV 0.047μF) [C629,627,661]
48	VCQYNU1HM473K	AB		C	Capacitor (50WV 0.047μF)
49	VCQYNU1HM332J	AC		C	Capacitor (50WV 3300pF) [C530]
50	VCQYNA1HM473K	AA		C	Capacitor (50WV 0.047μF) [C575]
51	VCQYNU1HM683J	AC		C	Capacitor (50WV 0.068μF) [C522]
52	VHDDAN202U／－1	AB		B	Diode (DAN202U) [DA603,604]
53	VHDDAP202U／－1	AB		B	Diode (DAP202U) [DA601,602]
54	VHDDSS133／／－1	AA		B	Diode (DSS133) [D504]
55	VHDEK14／／／／－1	AE		B	Diode (EK14) [D501,502,505]
56	VHD1SS355／／－1	AB		B	Diode (1SS355) [D603~606]
57	VHD10E1／／／／－1	AA		B	Diode (10E1) [D503]
58	VHDRB501V40－1	AD		B	Diode (RB501V-40) [D607]
59	VHEHZ27－1／／－1	AB		B	Zener diode (HZ27) [ZD502]
60	VHERD2.7EB2－1	AB		B	Zener diode (RD2.7EB2) [ZD503,504]
61	VHERD4.3EL3－1	AB		B	Zener diode (RD4.3EL3) [ZD505,506]
62	VHiBU4051BCF／	AF		B	IC (BU4051BCF) [IC608]
63	VHiBU4053BCF1	AE		B	IC (BU4053BCF1) [IC516,605]
64	VHiCGS410／／－1	AU		B	IC (CGS410) [IC508]
65	VHiCG46533175	BA		B	IC (CG46533175) [IC509]
66	VHiHY18164CSJ	AZ		B	D RAM (HY18164CSJ) [IC504]
67	VHiLC8213K／－1	AZ		B	IC (LC8213K) [IC505]
68	VHiLM311／／－1F	AD		B	IC (LM311) [IC607]
69	VHiLM386M／／－1	AE		B	IC (LM386M) [IC609]
70	VHiLZ9FH19／／／	AV		B	IC (LZ9F19) [IC506]
71	VHiMC34063P－1	AN		B	IC (MC34063P) [IC513]
72	VHiNJM084M／－F	AH		B	IC (NJM084M) [IC606]
73	VHiNJU6355E－1	AM		B	IC (NJU6355E) [IC602]
74	VHiNSFX200－25	BG		B	IC (NSFX200-25) [IC503]
75	VHiNS32FX164／	BG		B	IC (NS32FX164) [IC507]
76	VHiTL431CLP－2	AG		B	IC (TL431CLP-2) [IC514]
77	VHiULN2003ANS	AE		B	IC (ULN2003ANS) [IC603]
78	VHiW24257A12J	AN		B	IC (W24257A12J) [IC512]
79	VHiW2465S70LL	AW		B	IC (W2465S70LL) [IC501]
81	VHiW166G／／／／／	AT	N	B	IC (W166G) [IC604]
82	VHi1816－6／／－1	AZ		B	IC (1816-6) [IC510,515]
83	VHi74VHC11／／／	AF		B	IC (74VHC11) [IC601]
84	VHPPC814／／／－1	AE		B	Photo coupler (PC814) [IS503]
85	VHPPC817／／／－1	AF		B	Photo coupler (PC817) [IS502]
86	VHVRA391PV6－1	AE		B	Varistor (PA391PV6) [V501]
87	VHVTNR5V471K／	AD		B	Varistor (TNR5V471K) [RV502,503]
88	VRD－HT2EY330J	AA		B	Resistor (1/4W 33Ω ±5%) [R522]
89	VRD－HT2EY392J	AA		C	Resistor (1/4W 3.9KΩ ±5%) [R626]
90	VRD－HT2EY4R7J	AA		C	Resistor (1/4W 4.7Ω ±5%) [R521]
91	VRD－HT2HY101J	AA		C	Resistor (1/2W 100Ω ±5%) [R501,513]
92	VRD－HT2HY153J	AB		C	Resistor (1/2W 15KΩ ±5%) [R510,512]
93	VRD－HT2HY4R7J	AA		C	Resistor (1/2W 4.7Ω ±5%) [R509]
94	VRD－HT2HY561J	AA		C	Resistor (1/2W 560Ω ±5%) [R503]
95	VRS－CY1JD000J	AA		C	Resistor (1/16W 0Ω ±5%) [R621,633,670,728,730,732]
96	VRS－CY1JD100J	AA		C	Resistor (1/16W 10Ω ±5%) [R725]
97	VRS－CY1JD101J	AA		C	Resistor (1/16W 100Ω ±5%) [R607,622,666]
98	VRS－CY1JD102J	AA		C	Resistor (1/16W 1.0KΩ ±5%) [R647,664,673,703]
99	VRS－CY1JD103J	AA		C	Resistor (1/16W 10KΩ ±5%) [R511,514,605,620,624,627,644,661,663,665,669,675~691,693,695~700]
	VRS－CY1JD103J	AA		C	Resistor (1/16W 10KΩ ±5%) [R704,705,717~719,726,727,729,733,734]
100	VRS－CY1JD104J	AA		C	Resistor (1/16W 100KΩ ±5%) [R614]
101	VRS－CY1JD105J	AA		C	Resistor (1/16W 1.0MΩ ±5%) [R619]
102	VRS－CY1JD106J	AA		C	Resistor (1/16W 10MΩ ±5%) [R618]
103	VRS－CY1JD121J	AA		C	Resistor (1/16W 120Ω ±5%) [R723]
104	VRS－CY1JD123J	AA		C	Resistor (1/16W 12KΩ ±5%) [R628,708]
105	VRS－CY1JD181J	AA		C	Resister (1/16W 180Ω ±5%) [R505~508,623,645,646,648,649,650,660,662,668]
106	VRS－CY1JD182J	AA		C	Resistor (1/16W 1.8KΩ ±5%) [R714]
107	VRS－CY1JD221J	AA		C	Resistor (1/16W 220Ω ±5%) [R671,667,720]
108	VRS－CY1JD222J	AA		C	Resistor (1/16W 2.2KΩ ±5%) [R604,712]
109	VRS－CY1JD223J	AA		C	Resistor (1/16W 22KΩ ±5%) [R520,631,653,694,707]
110	VRS－CY1JD330J	AA		C	Resistor (1/16W 33Ω ±5%) [R630,639,640,641,642]
111	VRS－CY1JD331J	AA		C	Resistor (1/16W 330Ω ±5%) [R638,643,706,711]
112	VRS－CY1JD390J	AA		C	Resistor (1/16W 39Ω ±5%) [R613,615,616,617,625,722,724]
113	VRS－CY1JD333J	AA		C	Resistor (1/16W 33KΩ ±5%) [R610]
114	VRS－CY1JD472J	AA		C	Resistor (1/16W 4.7KΩ ±5%) [R606,609]
115	VRS－CY1JD473J	AA		C	Resistor (1/16W 47KΩ ±5%) [R515,611,612]
116	VRS－CY1JD511J	AA		C	Resistor (1/16W 510Ω ±5%) [R716]
117	VRS－CY1JD512J	AA		C	Resistor (1/16W 5.1KΩ ±5%) [R517,603]
118	VRS－CY1JD562J	AA		C	Resistor (1/16W 5.6KΩ ±5%) [R516]

14 AR-FX3(Fax PWB)

NO.	PARTS CODE	PRICE RANK	NEW MARK	PART RANK	DESCRIPTION	
119	VRS−CY1JD750J	AA		C	Resistor (1/16W 75Ω ±5%)	[R721]
120	VRS−CY1JD821J	AA		C	Resistor (1/16W 820Ω ±5%)	[R713]
121	VRS−CY1JD822J	AA		C	Resistor (1/16W 8.2KΩ ±5%)	[R651]
122	VRS−CY1JD911J	AA		C	Resistor (1/16W 910Ω ±5%)	[R652]
123	VRS−TS2AD680J	AA		C	Resistor (1/10W 68Ω ±5%)	[L607]
124	VRS−TS2AD000J	AA		C	Resistor (1/10W 0Ω ±5%)	[L508~510,606]
125	VRSCY1JD1542F	AA		C	Resistor (1/16W 15.4KΩ ±1%)	[R709]
126	VRSCY1JD2153F	AA		C	Resistor (1/16W 215KΩ ±1%)	[R672]
127	VRSCY1JD2433F	AA		C	Resistor (1/16W 243KΩ ±1%)	[R674]
128	VRSCY1JD3740F	AA		C	Resistor (1/16W 374KΩ ±1%)	[R519]
129	VRSCY1JD3921F	AA		C	Resistor (1/16W 3.92KΩ ±1%)	[R701]
130	VRSCY1JD4642F	AA		C	Resistor (1/16W 46.4kΩ ±1%)	[R636,637,702]
131	VRSCY1JD4872F	AA		C	Resistor (1/16W 48.7KΩ ±1%)	[R635]
132	VRSCY1JD5112F	AA		C	Resistor (1/16W 51.1kΩ ±1%)	[R654,710]
133	VRSCY1DR5622F	AA	N	B	Resistor (1/16W 56.2KΩ ±1%)	[R518,655]
134	VS2SC3382−/−1	AD		B	Transistor (2SC3382)	[Q504]
135	VS2SC3708−/−1	AD		B	Transistor (2SC3708)	[Q501]
	(Unit)					
901	CPWBX0040QS53	CE		E	Fax PWB unit	

15 AR-PG1(GDI/USB PWB)

NO.	PARTS CODE	PRICE RANK	NEW MARK	PART RANK	DESCRIPTION	
1	QCNCW0946FCZZ	AH		C	Connector (36pin)	[CN501]
2	QCNCW1124LC3A	AE		C	Connector (31FEBT-VK-N)	[CN502]
3	QCNCW7045XCZZ	AG		C	Connector	[CN503]
4	RCiLZ1032CCZZ	AD		C	Coil (SBO-02SAN)	[L501~503,]
5	RCRSZ7011XCZZ	AE		B	Crystal (12MHz)	[X501,]
6	VCCCCY1HH101J	AA		C	Capacitor (50WV 100pF)	[C601~608,614~618,]
7	VCCCCY1HH150J	AB		C	Capacitor (50WV 15pF)	[C515,516,]
8	VCCCCY1HH330J	AA		C	Capacitor (50WV 33pF)	[C610,611,]
9	VCCCCY1HH561J	AB		C	Capacitor (50WV 560pF)	[C612]
10	VCEAGU1CW106M	AA		C	Capacitor (16WV 10μF)	[C502,503,]
11	VCEAGU1CW476M	AB		C	Capacitor (16WV 47μF)	[C501,]
12	VCKYCY1CF104Z	AA		C	Capacitor (16WV 0.1μF)	[C504~515,518~520,619~622,]
13	VCKYCY1EB223K	AA		C	Capacitor (25WV 0.022μF)	[C613,]
14	VCKYCY1HB102K	AA		C	Capacitor (50WV 1000pF)	[C609,]
15	VHDDAP202K/−1	AB		B	Diode (DAP202K)	[D601~609,]
16	VHiAT24C16N//	AL		B	EEPROM (AT24C16N)	[IC605]
17	VHiTC7SH08FU1	AE		B	IC (TC7SH08FU1)	[IC606,]
18	VHiUSS−725///	BD		B	IC (USS-725)	[IC604,]
19	VHi74LS244NS1	AH		B	IC (74LS244NS1)	[IC602,603,]
20	VHi74LS245NS1	AF		B	IC (74LS245NS1)	[IC601,]
21	VRD−HT2HY101J	AA		C	Resistor (1/2W 100Ω ±5%)	[R501,]
22	VRS−CY1JD102J	AA		C	Resistor (1/16W 1.0KΩ ±5%)	[R502~504,]
23	VRS−CY1JD103J	AA		C	Resistor (1/16W 10KΩ ±5%)	[R509~511,]
24	VRS−CY1JD122J	AA		C	Resistor (1/16W 1.2KΩ ±5%)	[R618~629,]
25	VRS−CY1JD152J	AA		C	Resistor (1/16W 1.5KΩ ±5%)	[R507,]
26	VRS−CY1JD203J	AA		C	Resistor (1/16W 20KΩ ±5%)	[RV661,]
27	VRS−CY1JD220J	AA		C	Resistor (1/16W 22Ω ±5%)	[R601~617,]
28	VRS−CY1JD240J	AA		C	Resistor (1/16W 24Ω ±5%)	[R505,506,508,]
29	VRS−CY1JD332J	AA		C	Resistor (1/16W 3.3KΩ ±5%)	[R630,]

■ Index

PARTS CODE	NO.	PRICE RANK	NEW MARK	PART RANK	
【C】					
CBTN-0037QS01	5- 8	AK		C	
CBTN-0040QS01	5- 6	AH		C	
CBTN-0041QS01	5- 5	AH		C	
CCAB-0027QS01	5- 2	AS		C	
CFRM-0009QS53	7- 17	BE		E	
〃	8-901	BE		E	
CFRM-0011QS51	1- 11	BE		E	
〃	2-901	BE		E	
CFRM-0013QS51	1- 14	BS		E	
〃	3-901	BS		E	
CPWBF0009QS51	2- 7	AG		E	
CPWBF0009QS52	5- 40	AU		E	
CPWBF0046QS51	5- 9	BH		E	
〃	13-901	BH		E	
CPWBX0040QS53	14-901	CE		E	
CRŌLP0015QS01	8- 25	AU		C	
CSŌU-0004QS51	1-501	BC		E	
【D】					
DHAi-0053QSZZ	7- 18	AM		C	
DHAi-0054QSZZ	3- 9	AR		C	
DHAi-0055QSZZ	2- 8	AK		C	
DHAi-0084QSZ1	3- 8	AT		C	
DHAi-0158QSZZ	8- 14	AN		C	
DHAi-0159QSZ1	5- 39	AN		C	
DHAi-0160QSZZ	5- 37	AH		C	
DHAi-0161QSZ2	6- 34	BA		C	
DHAi-0162QSZZ	6- 47	AE		C	
DHAi-0173QSZZ	12- 3	AE	N	C	
DUNT-0084QS11	9- 13	AU		E	
〃	10- 22	AU		E	
DUNT-0130QSZ1	12- 6	AL	N	D	
【G】					
GCAB-0008QSZZ	2- 1	AM		D	
GCŌVA0005QSZZ	7- 1	AM		D	
GCŌVA0006QSZZ	7- 3	AN		D	
GCŌVA0007QSZZ	7- 10	AK		D	
GCŌVA0008QSZZ	7- 14	AK		D	
GLEGG0064FCZZ	7- 7	AC		D	
【J】					
JBTN-0036QSZZ	5- 7	AF		C	
JBTN-0038QSZZ	5- 4	AF		C	
JBTN-0039QSZZ	5- 3	AE		C	
JKNBZ0004QSZZ	3- 28	AD		C	
〃	6- 35	AD		C	
【L】					
LANGT0004QSZZ	4- 8	AC		C	
LANGT0005QSZZ	4- 1	AD		C	
LBNDJ0013FCZ1	1- 15	AA		C	
〃	3- 10	AA		C	
〃	4- 6	AA		C	
〃	6- 14	AA		C	
〃	8- 31	AA		C	
〃	9- 10	AA		C	
LBŌSZ1031FCZZ	8- 7	AC		C	
LBŌSZ1508FCZZ	2- 19	AG		C	
〃	5- 14	AG		C	
LBSHZ0303FCZZ	2- 20	AC		C	
〃	5- 18	AC		C	
LFRM-0009QSZ2	8- 26	AQ		D	
LFRM-0011QSZ1	2- 35	AL	N	C	
LFRM-0012QSZZ	3- 20	AD		C	
〃	6- 26	AD		C	
LFRM-0013QSZZ	3- 12	AG		C	
〃	6- 10	AG		C	
LFRM-0033QSZZ	5- 28	AP		C	
LHLDW1226FCZZ	11- 2	AB		C	
LPLTM0036QSZZ	7- 6	AF		C	
LPLTM0096QSZZ	1- 30	AF		C	
〃	4- 30	AF		C	
LPLTM0146QSZZ	6- 1	AD		C	
LPLTP0011QSZZ	1- 2	AH		C	
LPLTP0012QSZZ	1- 3	AH		C	
LPLTP0013QSZZ	3- 22	AD		C	
〃	6- 43	AD		C	
LPLTP0139QSZZ	4- 44	AF		C	
LPLTP0140QSZZ	4- 42	AF		C	
LPLTP0150QSZZ	5- 26	AG		C	

PARTS CODE	NO.	PRICE RANK	NEW MARK	PART RANK	
LSŌU-0004QSZZ	1- 1	AX		D	
LSŌU-0005QSZ3	1- 33	BB		D	
〃	4- 34	BB		D	
LSŌU-0020QSZZ	4- 43	AT		C	
LSTPP0001QSZZ	2- 5	AD		C	
LSTPP0008QSZZ	5- 20	AD		C	
LX-BZ0012QSZZ	3- 3	AC		C	
〃	6- 13	AC		C	
LX-BZ0016QSZZ	1- 31	AC		C	
〃	4- 31	AC		C	
【M】					
MARMP0001QSZZ	3- 5	AF		C	
〃	6- 11	AF		C	
MARMP0002QSZZ	2- 13	AD		C	
〃	5- 25	AD		C	
MARMP0003QSZ1	2- 4	AD		C	
〃	5- 19	AD		C	
MARMP0004QSZZ	2- 34	AF		C	
〃	5- 42	AF		C	
MARMP0012QSZZ	7- 13	AD		C	
MARMP0229FCZZ	8- 12	AE		C	
MHNG-0003QSYZ	4- 32	AX		C	
MHNG-0003QSZZ	1- 21	AX		C	
MHNG-0004QSZZ	1- 32	AX		C	
〃	4- 28	AX		C	
MLEVP0009QSZZ	2- 9	AD		C	
〃	5- 22	AD		C	
MLEVP0010QSZZ	2- 10	AE		C	
〃	5- 23	AE		C	
MLEVP0011QSZ1	5- 27	AE		C	
MLEVP0033QSZZ	8- 16	AF		C	
MLEVP0050QSZZ	8- 27	AD		C	
MSPRC0062QSZZ	3- 23	AC		C	
〃	6- 45	AC		C	
MSPRC0063QSZZ	3- 29	AB		C	
〃	6- 28	AB		C	
MSPRC0115QSZZ	2- 33	AB		C	
〃	5- 44	AB		C	
MSPRC0149QSZZ	1- 37	AC		C	
〃	4- 27	AC		C	
MSPRC0161QSZZ	8- 8	AF		C	
MSPRC1316FCZ1	2- 18	AE		C	
〃	5- 15	AE		C	
MSPRC2544FCZZ	7- 9	AC		C	
MSPRC2545FCZZ	8- 13	AB		C	
MSPRC2546FCZZ	8- 21	AB		C	
MSPRD0058QSZZ	8- 17	AG		C	
MSPRD0114QSZ1	2- 36	AD		C	
MSPRD0159QSZZ	8- 28	AC		C	
MSPRP0059QSZZ	1- 7	AD		C	
〃	4- 37	AD		C	
MSPRP0060QSZZ	1- 27	AD		C	
〃	4- 26	AD		C	
MSPRP0065QSZZ	3- 24	AD		C	
〃	6- 41	AD		C	
MSPRP0113QSZ1	1- 18	AD		C	
〃	4- 15	AD		C	
MSPRT0061QSZZ	1- 26	AC		C	
〃	4- 24	AC		C	
MSPRT0064QSZ1	3- 11	AC		C	
〃	6- 15	AC		C	
MSPRT0066QSZ1	2- 25	AC		C	
〃	5- 30	AC		C	
MSPRT0067QSZ1	2- 14	AB		C	
〃	5- 24	AB		C	
MSPRT0112QSZ1	7- 12	AC		C	
【N】					
NBLTT0003QSZZ	3- 27	AG		B	
〃	6- 37	AG		B	
NBLTT0006QSZZ	3- 15	AG		B	
〃	6- 18	AG		B	
NBRGC0098FCZZ	3- 18	AC		C	
〃	6- 23	AC		C	
NBRGM5006BCZZ	3- 19	AB		C	
〃	6- 25	AB		C	
NBRGZ1043HCZZ	8- 2	AD		C	
NGERH0041QSZZ	8- 22	AF		C	
NGERH0047QSZZ	3- 16	AF		C	
〃	6- 21	AF		C	
NGERH0073QSZZ	2- 16	AE		C	
〃	5- 17	AE		C	

PARTS CODE	NO.	PRICE RANK	NEW MARK	PART RANK	
NGERH0193FCZZ	1- 6	AB		C	
〃	4- 36	AB		C	
NGERH0972FCZZ	3- 4	AB		C	
〃	6- 12	AB		C	
NGERH0990FCZZ	2- 28	AB		C	
〃	5- 51	AB		C	
〃	8- 23	AB		C	
NGERH0992FCZZ	2- 30	AB		C	
〃	5- 45	AB		C	
〃	8- 5	AB		C	
NGERH1132FCZZ	8- 10	AH		C	
NGERH1207FCZZ	8- 11	AF		C	
NGERR0377FCZZ	1- 4	AD		C	
〃	4- 41	AD		C	
NPLYZ0010QSZZ	2- 23	AE		C	
〃	5- 32	AE		C	
NPLYZ0146FCZZ	3- 26	AB		C	
〃	6- 38	AB		C	
NRŌLM0022QSZZ	3- 36	AP		C	
〃	6- 30	AP		C	
NRŌLM0023QSZZ	3- 32	AP		C	
〃	6- 29	AP		C	
NRŌLP0010QSZZ	1- 28	AD		C	
〃	4- 23	AD		C	
NRŌLP0011QSZZ	1- 23	AD		C	
〃	4- 18	AD		C	
NRŌLP0019QSZ1	8- 1	AP		C	
NRŌLP0024QSZZ	2- 27	AL		C	
〃	5- 49	AL		C	
NRŌLP1060FCZZ	7- 11	AF		C	
NRŌLR0922FCZZ	2- 31	AR		C	
〃	5- 46	AR		C	
NSFTZ0009QSZZ	1- 29	AE		C	
〃	4- 21	AE		C	
NSFTZ0010QSZZ	1- 25	AE		C	
〃	4- 20	AE		C	
NSFTZ0011QSZZ	2- 32	AG		C	
〃	5- 48	AG		C	
NSFTZ0012QSZZ	2- 21	AG		C	
〃	5- 12	AG		C	
【P】					
PBRSR0003QSZZ	3- 33	AL		B	
〃	6- 33	AL		B	
PCŌVP0036QSZZ	1- 8	AK		D	
〃	4- 35	AK		D	
PCŌVP0037QSZZ	3- 37	AH		D	
PCŌVP0038QSZZ	3- 38	AL		D	
PCŌVP0042QSZZ	6- 8	AH		C	
PCŌVP0043QSZZ	6- 7	AL		C	
PCŌVP0045QSZZ	10- 18	AL		D	
PCŌVP0046QSZZ	10- 17	AF		D	
PCUSS0010QSZ1	1- 34	AV		C	
〃	4- 33	AV		C	
〃	9- 8	AV		C	
〃	10- 1	AV		C	
PFiLW0009QSZZ	5- 1	AL		C	
PGiDH0029QSZZ	3- 34	AL		C	
〃	6- 32	AL		C	
PGiDM0015QSZZ	7- 8	AY		C	
PGiDM0016QSZZ	7- 4	AY		C	
PGiDM0019QSZZ	9- 14	AH		C	
〃	10- 19	AH		C	
PGiDM0020QSZZ	9- 15	AH		C	
〃	10- 20	AH		C	
PGiDM0024QSZ2	4- 4	AQ		C	
〃	6- 27	AQ		C	
PGiDM0024QSZZ	3- 30	AQ		C	
PGiDM0042QSZZ	3- 1	AL		C	
PGiDM0058QSZZ	6- 3	AK		C	
PPiPP0007QSZZ	8- 9	AD		C	
PPiPP0008QSZZ	2- 17	AD		C	
〃	5- 16	AD		C	
PSHEP0037QSZ1	1- 19	AE		C	
〃	4- 16	AE		C	
PSHEP0038QSZZ	1- 16	AE		C	
〃	4- 12	AE		C	
PSHEP0044QSZZ	3- 35	AF		C	
PSHEP0063QSZZ	1- 17	AC		C	
〃	4- 13	AC		C	
PSHEP3029FCZZ	3- 14	AA		C	
〃	6- 20	AA		C	

PARTS CODE	NO.	PRICE RANK	NEW MARK	PART RANK	
PSHEZ0039QSZZ	3- 21	AG		C	
〃	6- 44	AG		C	
PSHEZ0102QSZZ	1- 35	AD		C	
〃	4- 14	AD		C	
PSHEZ0112QSZZ	1- 36	AE		C	
〃	4- 22	AE		C	
PSHEZ0164QSZZ	6- 31	AF		C	
PSHEZ0190QSZZ	14- 2	AD		C	
PSHEZ2174FCZZ	3- 25	AB		C	
〃	6- 42	AB		C	
PSPAF0013QSZZ	13- 1	AD		C	
PSPŌ-0001QSZZ	1- 24	AB		C	
〃	4- 19	AB		C	
PSPŌ-0002QSZZ	2- 2	AC		C	
PSPŌ-0006QSZ1	5- 11	AB		C	
PTME-0008QSZZ	8- 20	AD		C	
PTME-0019QSZZ	2- 26	AD		B	
〃	5- 29	AD		B	
PTUBP0119FCZZ	6- 50	AB		C	
【Q】					
QCNCM0811FCZZ	13- 2	AC		C	
QCNCM7022SC1J	14- 3	AE		C	
QCNCW0034QSZZ	14- 4	AL		C	
QCNCW0946FCZZ	15- 1	AH		C	
QCNCW1124LC3A	15- 2	AE		C	
QCNCW7045XCZZ	15- 3	AG		C	
QCNW-7197XCZZ	10-101	AH		B	
QJAKT7004XCZZ	14- 5	AH		C	
QSŌCZ0051FCZZ	14- 6	AD		C	
QSW-B0003QSZZ	8- 24	AF		B	
QSW-P0005QSZZ	13- 3	AC		B	
【R】					
RC-DZ1080RC0L	14- 7	AR		C	
RC-K1E104HCZT	14- 8	AA	N	C	
RC-KZ1053RC1E	14- 9	AC		C	
RCiLZ0007QSZZ	14- 10	AF		C	
RCiLZ1032CCZZ	14- 11	AD		C	
〃	15- 4	AD		C	
RCiLZ1063YCZZ	14- 12	AC		C	
RCiLZ7009XCZZ	14- 13	AC		C	
RCŌRF0022FCZZ	9- 9	AQ		C	
RCŌRF1023LCZZ	3- 40	AL		C	
RCRMZ0002QSZZ	13- 4	AE		C	
RCRSP6676RCZZ	14- 14	AG		B	
RCRSZ0013QSZZ	14- 15	AP		B	
RCRSZ7011XCZZ	15- 5	AE		B	
RDTCT0004QSZZ	3- 31	AL		B	
〃	6- 46	AL		B	
RFiLZ0002QSZZ	14- 17	AG		C	
RFiLZ0005QSZZ	14- 18	AC	N	C	
RMŌTP0013QSZZ	3- 7	BB		B	
〃	6- 9	BB		B	
RMPTW4103QCJJ	14- 19	AB		B	
RMPTW4220QCJJ	14- 20	AB		B	
RMPTW4223QCJJ	14- 21	AB		B	
RMPTW4390QCJJ	14- 22	AA		B	
RPLU-0004QSZ1	2- 11	AQ		B	
RPLU-0010QSZZ	8- 18	AN		B	
RPLU-0017QSZZ	5- 21	AQ		B	
RRLYD3213QCZZ	14- 23	AH		B	
RTRNZ0009QSZZ	14- 24	AQ		B	
RVR-B1440QCZZ	13- 5	AF		B	
【S】					
SPAK-548ECCZZ	12- 1	AB		D	
SPAKA0219QSZZ	9- 5	AP	N	D	
SPAKA0220QSZZ	9- 6	AQ	N	D	
SPAKA0221QSZZ	9- 3	AE	N	D	
SPAKA0224QSZZ	10- 7	AQ	N	D	
SPAKA0225QSZZ	10- 13	AQ	N	D	
SPAKA0226QSZZ	10- 6	AE	N	D	
SPAKA0227QSZZ	10- 4	AE	N	D	
SPAKA0228QSZZ	10- 16	AE	N	D	
SPAKA399ACCZZ	10- 15	AB		D	
SPAKA5108FCZZ	11- 4	AF		D	
SPAKA5824FCZZ	12- 2	AF	N	D	
SPAKC0222QSZZ	9- 7	AT	N	D	
SPAKC0223QSZZ	11- 6	AQ	N	D	
SPAKC0229QSZZ	10- 9	AT	N	D	
SPAKC0231QSZZ	12- 8	AG		D	
SSAKA0019SCZZ	9- 1	AA		D	
〃	10- 14	AA		D	

PARTS CODE	NO.	PRICE RANK	NEW MARK	PART RANK	
SSAKA0019SCZZ	12- 5	AA		D	
SSAKA2011KCZZ	9- 12	AA		D	
〃	10- 12	AA		D	
〃	11- 9	AA		D	
SSAKA3442QCZZ	9- 16	AB		D	
〃	10- 21	AB		D	
SSAKH0021SCZZ	11- 5	AC		D	
SSAKH3012KCZZ	9- 4	AD		D	
〃	10- 8	AD		D	
【T】					
TCADZ0075QSZZ	9- 2	AE	N	D	
TCADZ0076QSZZ	10- 3	AE	N	D	
TCADZ0077QSZZ	11- 3	AE	N	D	
TCADZ0078QSZZ	12- 7	AH	N	D	
TiNSE0258QSZZ	10- 5	AX	N	D	
TiNSE0305QSZZ	12- 9	AY	N	D	
TLABH0152QSZZ	10-102	AD	N	C	
TTAG-0002QSZZ	11- 1	AB	N	C	
【U】					
UBATL2034SCZZ	14- 25	AH		B	
【V】					
VCCCCY1EH102J	14- 26	AB		C	
VCCCCY1HH101J	14- 27	AA		C	
〃	15- 6	AA		C	
VCCCCY1HH150J	15- 7	AB		C	
VCCCCY1HH180J	14- 28	AA		C	
VCCCCY1HH201J	14- 29	AA		C	
VCCCCY1HH220J	14- 30	AA		C	
VCCCCY1HH330J	15- 8	AA		C	
VCCCCY1HH561J	15- 9	AB		C	
VCCCTQ1HH332J	14- 31	AC		C	
VCCCTV1HH330J	14- 32	AA		C	
VCCCTV1HH471J	13- 6	AA		C	
VCEAGA0JW107M	14- 33	AC		C	
VCEAGA1AW226M	14- 34	AB		C	
VCEAGA1CW106M	14- 35	AA		C	
VCEAGA1CW107M	14- 36	AC		C	
VCEAGA1CW226M	14- 37	AB		C	
VCEAGA1CW476M	14- 38	AB		C	
VCEAGU1CW106M	15- 10	AA		C	
VCEAGU1CW476M	15- 11	AB		C	
VCEAJU1CW226M	13- 7	AB		C	
VCFYEG2EA223M	14- 39	AE		C	
VCFYJU2EA334K	14- 40	AD		C	
VCFYJU2EA824K	14- 41	AE		C	
VCKYCY1CB333K	14- 42	AB		C	
VCKYCY1CF104Z	14- 43	AA		C	
〃	15- 12	AA		C	
VCKYCY1EB223K	15- 13	AA		C	
VCKYCY1EF104Z	14- 44	AA		C	
VCKYCY1HB102K	15- 14	AA		C	
VCKYCY1HB103K	14- 45	AA		C	
VCKYCY1HB331K	14- 46	AA		C	
VCKYCY1HF473Z	14- 47	AA		C	
VCKYTV1EB104K	13- 8	AA		C	
VCQYNA1HM473K	14- 50	AA		C	
VCQYNU1HM332J	14- 49	AC		C	
VCQYNU1HM473K	14- 48	AB		C	
VCQYNU1HM683J	14- 51	AC		C	
VHD10E1////-1	14- 57	AA		B	
VHD1SS355//-1	14- 56	AB		B	
VHDDAN202U/-1	13- 9	AB		B	
〃	14- 52	AB		B	
VHDDAP202K/-1	15- 15	AB		B	
VHDDAP202U/-1	13- 10	AB		B	
〃	14- 53	AB		B	
VHDDSS133//-1	14- 54	AA		B	
VHDEK14////-1	14- 55	AE		B	
VHDRB501V40-1	14- 58	AD		B	
VHEHZ27-1//-1	14- 59	AB		B	
VHERD2.7EB2-1	14- 60	AB		B	
VHERD4.3EL3-1	14- 61	AB		B	
VHi1816-6//-1	14- 82	AZ		B	
VHi27C08001QS	14- 1	BA	N	B	
VHi74LS244NS1	15- 19	AH		B	
VHi74LS245NS1	15- 20	AF		B	
VHi74VHC11///	14- 83	AF		B	
VHiAT24C16N//	15- 16	AL		B	
VHiBU4051BCF/	14- 62	AF		B	
VHiBU4053BCF1	14- 63	AE		B	
VHiCG46533175	14- 65	BA		B	

PARTS CODE	NO.	PRICE RANK	NEW MARK	PART RANK	
VHiCGS410//-1	14- 64	AU		B	
VHiHD4074344/	13- 11	AX		B	
VHiHY18164CSJ	14- 66	AZ		B	
VHiLC8213K/-1	14- 67	AZ		B	
VHiLM311//-1F	14- 68	AD		B	
VHiLM386M//-1	14- 69	AE		B	
VHiLZ9FH19///	14- 70	AV		B	
VHiMC34063P-1	14- 71	AN		B	
VHiNJM084M/-F	14- 72	AH		B	
VHiNJM431U/-1	13- 12	AF		B	
VHiNJU6355E-1	14- 73	AM		B	
VHiNS32FX164/	14- 75	BG		B	
VHiNSFX200-25	14- 74	BG		B	
VHiTC7SH08FU1	15- 17	AE		B	
VHiTL431CLP-2	14- 76	AG		B	
VHiULN2003ANS	14- 77	AE		B	
VHiUSS-725///	15- 18	BD		B	
VHiW166G/////	14- 81	AT	N	B	
VHiW24257A12J	14- 78	AN		B	
VHiW2465S70LL	14- 79	AW		B	
VHP1LHLE-002A	13- 13	AC		B	
VHPGP1A71A1-1	8- 15	AG		B	
VHPPC814///-1	14- 84	AE		B	
VHPPC817///-1	14- 85	AF		B	
VHVRA391PV6-1	14- 86	AE		B	
VHVTNR5V471K/	14- 87	AD		B	
VRD-HT2EY330J	14- 88	AA		B	
VRD-HT2EY392J	14- 89	AA		C	
VRD-HT2EY4R7J	14- 90	AA		C	
VRD-HT2HY101J	14- 91	AA		C	
〃	15- 21	AA		C	
VRD-HT2HY153J	14- 92	AB		C	
VRD-HT2HY4R7J	14- 93	AA		C	
VRD-HT2HY561J	14- 94	AA		C	
VRS-CY1JD000J	14- 95	AA		C	
VRS-CY1JD100J	14- 96	AA		C	
VRS-CY1JD101J	14- 97	AA		C	
VRS-CY1JD102J	14- 98	AA		C	
〃	15- 22	AA		C	
VRS-CY1JD103J	14- 99	AA		C	
〃	15- 23	AA		C	
VRS-CY1JD104J	14-100	AA		C	
VRS-CY1JD105J	14-101	AA		C	
VRS-CY1JD106J	14-102	AA		C	
VRS-CY1JD121J	14-103	AA		C	
VRS-CY1JD122J	15- 24	AA		C	
VRS-CY1JD123J	14-104	AA		C	
VRS-CY1JD152J	15- 25	AA		C	
VRS-CY1JD181J	14-105	AA		C	
VRS-CY1JD182J	14-106	AA		C	
VRS-CY1JD203J	15- 26	AA		C	
VRS-CY1JD220J	15- 27	AA		C	
VRS-CY1JD221J	14-107	AA		C	
VRS-CY1JD222J	14-108	AA		C	
VRS-CY1JD223J	14-109	AA		C	
VRS-CY1JD240J	15- 28	AA		C	
VRS-CY1JD330J	14-110	AA		C	
VRS-CY1JD331J	14-111	AA		C	
VRS-CY1JD332J	15- 29	AA		C	
VRS-CY1JD333J	14-113	AA		C	
VRS-CY1JD390J	14-112	AA		C	
VRS-CY1JD472J	14-114	AA		C	
VRS-CY1JD473J	14-115	AA		C	
VRS-CY1JD511J	14-116	AA		C	
VRS-CY1JD512J	14-117	AA		C	
VRS-CY1JD562J	14-118	AA		C	
VRS-CY1JD750J	14-119	AA		C	
VRS-CY1JD821J	14-120	AA		C	
VRS-CY1JD822J	14-121	AA		C	
VRS-CY1JD911J	14-122	AA		C	
VRS-TP2BD000J	13- 14	AA		C	
VRS-TS2AD000J	14-124	AA		C	
VRS-TS2AD101J	13- 15	AA		C	
VRS-TS2AD102J	13- 16	AA		C	
VRS-TS2AD103J	13- 17	AA		C	
VRS-TS2AD105J	13- 18	AA		C	
VRS-TS2AD202J	13- 19	AA		C	
VRS-TS2AD203J	13- 20	AA		C	
VRS-TS2AD242F	13- 21	AB		C	
VRS-TS2AD272F	13- 22	AA		C	
VRS-TS2AD391J	13- 23	AA		C	

PARTS CODE	NO.	PRICE RANK	NEW MARK	PART RANK	
VRS-TS2AD680J	14-123	AA		C	
VRS-TX2HD511J	13- 24	AB	N	C	
VRSCY1DR5622F	14-133	AA	N	B	
VRSCY1JD1542F	14-125	AA		C	
VRSCY1JD2153F	14-126	AA		C	
VRSCY1JD2433F	14-127	AA		C	
VRSCY1JD3740F	14-128	AA		C	
VRSCY1JD3921F	14-129	AA		C	
VRSCY1JD4642F	14-130	AA		C	
VRSCY1JD4872F	14-131	AA		C	
VRSCY1JD5112F	14-132	AA		C	
VS2SC3382-/-1	14-134	AD		B	
VS2SC3708-/-1	14-135	AD		B	
VSDTA143EK/-1	13- 25	AB		B	
VSP50PB518P//	6- 5	AL		B	
VVLHLM3212-01	13- 26	BA		E	
【X】					
XBBSE30P08000	9- 11	AA		C	
〃	12- 4	AA		C	
XBPSD30P05K00	3- 6	AA		C	
〃	6- 17	AA		C	
XBPSD30P06KS0	2- 12	AA		C	
〃	5- 31	AA		C	
XEBSD26P06000	5- 10	AA		C	
XEBSD30P08000	1- 20	AA		C	
〃	2- 6	AA		C	
〃	3- 39	AA		C	
〃	4- 25	AA		C	
〃	5- 41	AA		C	
〃	6- 2	AA		C	
〃	6- 16	AA		C	
〃	6- 24	AA		C	
〃	8- 30	AA		C	
XEBSD30P10000	4- 2	AA		C	
XEBSD30P12000	3- 2	AA		C	
〃	4- 9	AA		C	
〃	6- 4	AA		C	
XEBSD40P10000	1- 13	AA		C	
〃	4- 3	AA		C	
XEBSD40P12000	7- 5	AA		C	
XEBSE40P12000	7- 2	AA		C	
〃	11- 7	AA		C	
XEBSE40P14000	1- 22	AA		C	
〃	4- 29	AA		C	
XEBSE40P16000	11- 8	AA		C	
XEPSD30P08X00	1- 5	AA		C	
〃	4- 39	AA		C	
〃	6- 6	AA		C	
XHBSD30P06000	8- 19	AA		C	
XHBSD40P08000	7- 15	AA		C	
XHBSE30P08000	10- 10	AA		C	
XPSSP20-07000	2- 29	AA		C	
〃	5- 47	AA		C	
〃	8- 6	AA		C	
XPSSP20-09000	3- 17	AA		C	
〃	6- 22	AA		C	
XRESP30-06000	2- 24	AA		C	
〃	5- 50	AA		C	
XRESP40-06000	2- 15	AA		C	
〃	5- 13	AA		C	
〃	8- 3	AA		C	
XRESP50-06000	3- 13	AA		C	
〃	6- 19	AA		C	
XWHSD30-08160	8- 29	AA		C	

PARTS CODE	NO.	PRICE RANK	NEW MARK	PART RANK	

CAUTION FOR BATTERY REPLACEMENT

(Danish) ADVARSEL !
Lithiumbatteri – Eksplosionsfare ved fejlagtig håndtering.
Udskiftning må kun ske med batteri
af samme fabrikat og type.
Levér det brugte batteri tilbage til leverandoren.

(English) Caution !
Danger of explosion if battery is incorrectly replaced.
Replace only with the same or equivalent type
recommended by the manufacturer.
Dispose of used batteries according to manufacturer's instructions.

(Finnish) VAROITUS
Paristo voi räjähtää, jos se on virheellisesti asennettu.
Vaihda paristo ainoastaan laitevalmistajan suosittelemaan
tyyppiin. Hävitä käytetty paristo valmistajan ohjeiden
mukaisesti.

(French) ATTENTION
Il y a danger d'explosion s' il y a remplacement incorrect
de la batterie. Remplacer uniquement avec une batterie du
même type ou d'un type équivalent recommandé par
le constructeur.
Mettre au rebut les batteries usagées conformément aux
instructions du fabricant.

(Swedish) VARNING
Explosionsfara vid felaktigt batteribyte.
Använd samma batterityp eller en ekvivalent
typ som rekommenderas av apparattillverkaren.
Kassera använt batteri enligt fabrikantens
instruktion.

(German) Achtung
Explosionsgefahr bei Verwendung inkorrekter Batterien.
Als Ersatzbatterien dürfen nur Batterien vom gleichen Typ oder
vom Hersteller empfohlene Batterien verwendet werden.
Entsorgung der gebrauchten Batterien nur nach den vom
Hersteller angegebenen Anweisungen.

SHARP

COPYRIGHT © 1999 BY SHARP CORPORATION
All rights reserved.
Printed in Japan.
No part of this publication may be reproduced,
stored in a retrieval system, or transmitted,
in any form or by any means,
electronic, mechanical, photocopying, recording, or otherwise,
without prior written permission of the publisher.

SHARP CORPORATION
Digital Document Systems Group
Quality & Reliability Control Center
Yamatokoriyama, Nara 639-1186, Japan
1999 September Printed in Japan Ⓝ